siFramo og Simotec

Installasjonsretningslinjer

KRUGE
PIPING SYSTEMS

Anmerkninger

Applikasjon
Sikla ”Installasjonsretningslinjer” er ment å gi veiledning for støttekonstruksjoner innen industrielle rørledninger og anleggsteknikk som består av Sikla Systems siFramo 80, siFramo 100, Beam System 100 og Beam System 120. Alle CE-merkede systemer er underlagt sertifisert fabrikkproduksjonskontroll i henhold til EN 1090 og kan derfor brukes til EXC 2 for bærende konstruksjoner

Beregningsgrunnlag
Eurokode 3 (DIN EN 1993) ”Design av stålkonstruksjoner” gir grunnlag for å bestemme lastekapasiteten. Med hensyn til service er de spesifiserte begrensningene fordelt separat til utformingen av de enkelte konstruksjoner. Disse grensene kan også spesifiseres annerledes av klienten. Alle deformasjoner bestemmes på grunnlag av karakteristiske belastninger (γ = 1,0). Verdiene av de tillatte belastningene overholder samtidig den endelige grenseverdien og grensen for brukbarheten. De respektive belastninger er oppført som $_{Fz,\ Till.}$ i Installasjonsretningslinjer

Lasteffekter
Spesifisert er tillatt vertikal belastning $F_{z,\ till}$ i kN (for eksempel rørledningsvekter), som må forstås som maksimumsverdier av karakteristiske belastningseffekter og vurdert en sikkerhetsfaktor γ_F = 1,35. Noen Sikla konstruksjoner tar hensyn til ekstra friksjonskrefter $F_x = F_z * \mu_0$ for Sikla rør support basert på varmdempende galvanisert overflate av Sikla bjelker som beregnes fra rørvekt F_z og en friksjonskoeffisient μ_0 = 0.2. Disse variable kreftene fra rørutvidelse er tatt i betraktning med en sikkerhetsfaktor γ_F = 1,5. Glidende eller guidede rør support (Sikla glideelementer) med høyere koeffisient μ_0> 0,2 (for eksempel stål på stål) krever en individuell beregning.

Forhold
Alle belastninger er statiske belastninger ved romtemperatur, med mindre annet er angitt. Tekniske notater til de respektive produktdatabladene for bruk og bruksområde må overholdes.

Last overføring til byggestruktur
Ved festing med ankre, eller tilkobling til eksisterende innstøtningskanaler, må strukturell sikkerhetsanalyse for komponentene som brukes til dette formålet gjøres separat. Ved tilkobling til eksisterende stålkonstruksjoner på stedet, må robusthet, støtte og vridningsstivhet i den eksisterende strukturen kontrolleres separat. I tillegg, ved tilkobling med klemsett, er den statiske friksjonen mellom klemme sett og stålkonstruksjonen på stedet må oppfylle tilstanden $\mu_0 \geq 0{,}2$ (glidende overflater klasse D). Stålkonstruksjonsstørrelser (flensbredder) på ≥ 100 mm vurderes på stedet ved bruk av klemmer for tilkoblingspunkter. Med mindre annet er vist: tving retning F_x = stålkonstruksjon langsgående akse. Tilkoblinger til betong er konstruert med anker type VMZ-A M12 (ETA-10/0260) i betongstyrke C20 / C25 under konstruktionsspesifikasjonene $h_{std} \geq 2\ h_{ef}$ kantavstand c ≥ 120 mm. Akseavstander bestemmes av komponentene. Reduksjonsfaktor a_A = 0,7 for strukturelle stålflensstørrelser ≥ 201 mm for sluttstøtte WBD F80, F100 og F100 / 160.

Teknisk informasjon
Installasjonsbetingelsene er oppsummert på slutten av denne brosjyren - spesielt spesifikasjoner angående tiltrekkingsmomenter, boltavstand, generelle installasjonsanvisninger, etc.

Resirkulerbarhet av produkter
Produktene må kun gjenbrukes hvis de anbefalte arbeidsbelastningene ikke har blitt overskredet tidligere, og hvis belegget ikke er merkbart skadet.

Generelle merknader / Ansvarsfraskrivelse
Dette dokumentet er utelukkende for bruk av mottakeren, men forblir eiendommen til Sikla. Tekniske tegninger og alt annet innhold er etter vårt beste. Bilder og illustrasjoner er ikke-forpliktende. Vi kan ikke holdes ansvarlig for utskriftsfeil og deres implikasjoner. Vi forbeholder oss retten til å foreta endringer og forbedringer uten varsel.

Den nåværende retningslinjen tillater brukeren å velge og utforme støttestrukturer (konstruksjoner) enkelt. Dette dokumentet er utarbeidet i nært samarbeid med følgende eksterne spesialister

Kontakt

KRUGE AS
Industriveien 7
3430 Spikkestad

Tlf: 32 24 29 00
post@kruge.no

www.kruge.no

KRUGE + sikla
Sammen i over 20 år!

Working loads in accordance with Eurocode 3

Beam Section TP F 80/30

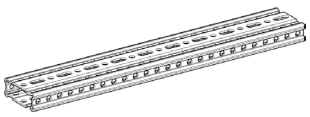

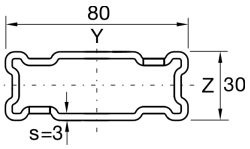

Single-span beam with uniaxial load
dead weight of the profile is considered

Distributed Load

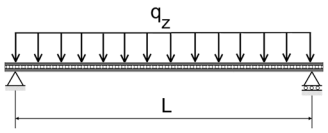

L_{max}	$q_{z, perm}$	F_z (q_z * L)
[mm]	[kN/m]	[kN]
500	**27,80**	**13,90**
1000	**5,44**	**5,44**
1500	**1,61**	**2,42**
2000	**0,68**	**1,36**
2500	**0,35**	**0,87**

q_z [kN/m] as permanent load over L.

Point Load

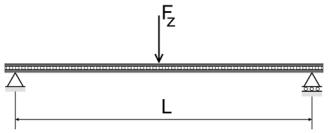

L_{max}	$F_{z, perm}$
[mm]	[kN]
500	**9,13**
1000	**3,40**
1500	**1,51**
2000	**0,85**
2500	**0,54**

F_z [kN] as a permanent load at L/2.

2 Point Loads

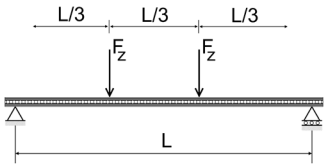

L_{max}	$F_{z, perm}$
[mm]	[kN]
500	**6,85**
1000	**1,99**
1500	**0,89**
2000	**0,50**
2500	**0,32**

F_z [kN] as permanent loads at L/3 and 2*L/3.

3 Point Loads

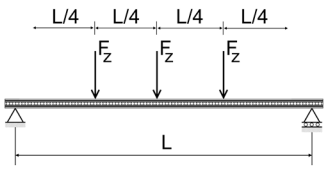

L_{max}	$F_{z, perm}$
[mm]	[kN]
500	**4,56**
1000	**1,43**
1500	**0,64**
2000	**0,36**
2500	**0,23**

F_z [kN] as permanent loads at L/4, L/2 and 3*L/4.

Max. bending L/200.

Working loads in accordance with Eurocode 3

L-Construction F 80 - 80/30

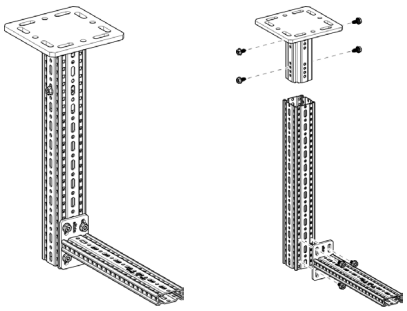

Part List
1 x End Support WBD F 80
1 x Beam Section TP F 80
1 x Cantilever Bracket AK F 80/30
8 x Self-Forming-Screw FLS F

Distributed Load

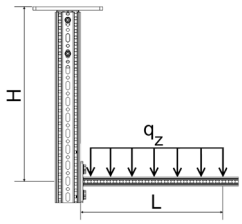

L_{max} / H_{max}	300		500		700	
	$q_{z, perm}$	F_z (q_z * L)	$q_{z, perm}$	F_z (q_z * L)	$q_{z, perm}$	F_z (q_z * L)
[mm]	[kN/m]	[kN]	[kN/m]	[kN]	[kN/m]	[kN]
500	**7,14**	**2,14**	**2,47**	**1,23**	**1,16**	**0,81**
1000	**6,05**	**1,82**	**2,14**	**1,07**	**1,02**	**0,71**
1500	**5,25**	**1,57**	**1,89**	**0,94**	**0,91**	**0,64**
2000	**4,63**	**1,39**	**1,69**	**0,84**	**0,82**	**0,57**

q_z [kN/m] as permanent load over L.

Point Load

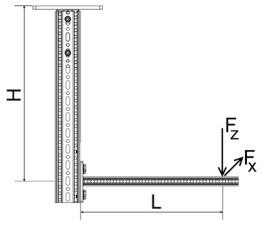

L_{max} / H_{max}	300		500		700	
	$F_{z, perm}$ for		$F_{z, perm}$ for		$F_{z, perm}$ for	
	$F_x = 0$	$F_x = \mu_0 * F_z$	$F_x = 0$	$F_x = \mu_0 * F_z$	$F_x = 0$	$F_x = \mu_0 * F_z$
[mm]	[kN]	[kN]	[kN]	[kN]	[kN]	[kN]
500	**1,08**	**1,08**	**0,58**	**0,58**	**0,37**	**0,37**
1000	**0,93**	**0,93**	**0,51**	**0,51**	**0,33**	**0,33**
1500	**0,82**	**0,82**	**0,46**	**0,46**	**0,30**	**0,30**
2000	**0,73**	**0,73**	**0,42**	**0,42**	**0,27**	**0,27**

F_z [kN] as a permanent load at distance L; F_x [kN] as a variable load at distance L.

2 Point Loads

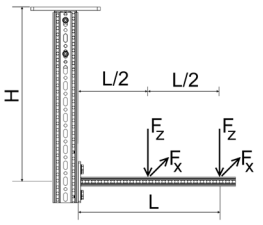

L_{max} / H_{max}	300		500		700	
	$F_{z, perm}$ for		$F_{z, perm}$ for		$F_{z, perm}$ for	
	$F_x = 0$	$F_x = \mu_0 * F_z$	$F_x = 0$	$F_x = \mu_0 * F_z$	$F_x = 0$	$F_x = \mu_0 * F_z$
[mm]	[kN]	[kN]	[kN]	[kN]	[kN]	[kN]
500	**0,75**	**0,75**	**0,41**	**0,41**	**0,26**	**0,26**
1000	**0,64**	**0,64**	**0,36**	**0,36**	**0,23**	**0,23**
1500	**0,56**	**0,56**	**0,32**	**0,32**	**0,21**	**0,21**
2000	**0,49**	**0,49**	**0,29**	**0,29**	**0,19**	**0,19**

F_z [kN] as permanent loads at distance L and L/2; F_x [kN] as variable loads at distance L and L/2.

3 Point Loads

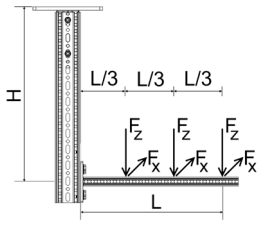

L_{max} / H_{max}	300		500		700	
	$F_{z, perm}$ for		$F_{z, perm}$ for		$F_{z, perm}$ for	
	$F_x = 0$	$F_x = \mu_0 * F_z$	$F_x = 0$	$F_x = \mu_0 * F_z$	$F_x = 0$	$F_x = \mu_0 * F_z$
[mm]	[kN]	[kN]	[kN]	[kN]	[kN]	[kN]
500	**0,56**	**0,56**	**0,31**	**0,31**	**0,20**	**0,20**
1000	**0,48**	**0,48**	**0,27**	**0,27**	**0,18**	**0,18**
1500	**0,42**	**0,42**	**0,24**	**0,24**	**0,16**	**0,16**
2000	**0,37**	**0,37**	**0,22**	**0,22**	**0,14**	**0,14**

F_z [kN] as permanent loads at distance L, 2*L/3 and L/3; F_x [kN] as variable loads at distance L, 2*L/3 and L/3.

All illustrated structures are able to be installed standing as well.
Friction coefficient μ_0 = 0,2 for friction in longitudinal direction. Max. deviation H/100; L/100.

Working loads in accordance with Eurocode 3

Frame F 80 - 80/30

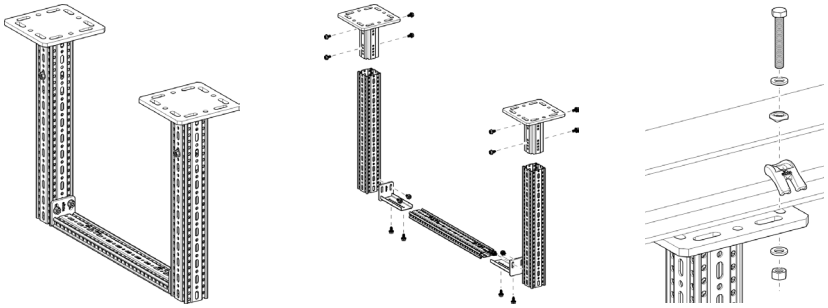

Part List
2 x End Support WBD F 80
2 x Beam Section TP F 80
1 x Beam Section TP F 80/30
2 x End Support STA F 80/30-E
16 x Self-Forming-Screw FLS F

Distributed Load

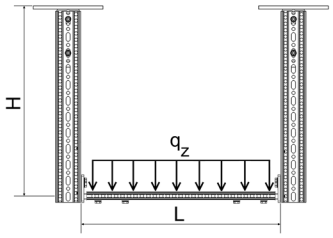

H_{max} \ L_{max}	500		1000		1500		2000		2500		3000	
	$q_{z,\,perm}$	F_z (q_z * L)	$q_{z,\,perm}$	F_z (q_z * L)	$q_{z,\,perm}$	F_z (q_z * L)	$q_{z,\,perm}$	F_z (q_z * L)	$q_{z,\,perm}$	F_z (q_z * L)	$q_{z,\,perm}$	F_z (q_z * L)
[mm]	[kN/m]	[kN]	[kN/m]	[kN]	[kN/m]	[kN]	[kN/m]	[kN]	[kN/m]	[kN]	[kN/m]	[kN]
500	**16,75**	**8,38**	**5,86**	**5,86**	**2,04**	**3,05**	**0,94**	**1,88**	**0,50**	**1,24**	**0,28**	**0,84**
1000	**16,75**	**8,38**	**5,81**	**5,81**	**2,02**	**3,03**	**0,93**	**1,87**	**0,49**	**1,24**	**0,28**	**0,84**
1500	**16,75**	**8,38**	**5,76**	**5,76**	**2,01**	**3,02**	**0,93**	**1,86**	**0,49**	**1,23**	**0,28**	**0,84**
2000	**16,75**	**8,38**	**5,71**	**5,71**	**2,00**	**3,00**	**0,92**	**1,85**	**0,49**	**1,22**	**0,28**	**0,83**

q_z [kN/m] as permanent load over L.

Point Load

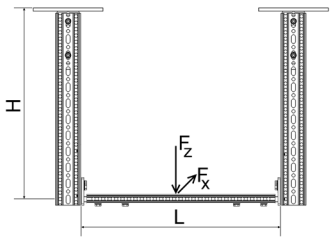

H_{max} \ L_{max}	500		1000		1500		2000		2500		3000	
	$F_{z,\,perm}$ for		$F_{z,\,perm}$ for		$F_{z,\,perm}$ for		$F_{z,\,perm}$ for		$F_{z,\,perm}$ for		$F_{z,\,perm}$ for	
	$F_x = 0$	$F_x = \mu_0 * F_z$	$F_x = 0$	$F_x = \mu_0 * F_z$	$F_x = 0$	$F_x = \mu_0 * F_z$	$F_x = 0$	$F_x = \mu_0 * F_z$	$F_x = 0$	$F_x = \mu_0 * F_z$	$F_x = 0$	$F_x = \mu_0 * F_z$
[mm]	[kN]	[kN]	[kN]	[kN]	[kN]	[kN]	[kN]	[kN]	[kN]	[kN]	[kN]	[kN]
500	**8,32**	**6,95**	**3,72**	**3,50**	**1,90**	**1,79**	**1,15**	**1,08**	**0,77**	**0,72**	**0,51**	**0,48**
1000	**8,32**	**6,95**	**3,70**	**3,48**	**1,89**	**1,78**	**1,15**	**1,08**	**0,76**	**0,72**	**0,51**	**0,48**
1500	**8,32**	**5,70**	**3,68**	**3,46**	**1,88**	**1,77**	**1,14**	**1,08**	**0,76**	**0,72**	**0,51**	**0,48**
2000	**8,32**	**3,85**	**3,65**	**3,44**	**1,87**	**1,76**	**1,14**	**1,07**	**0,76**	**0,71**	**0,51**	**0,48**

F_z [kN] as a permanent load at distance L/2; F_x [kN] as a variable load at distance L/2.

2 Point Loads

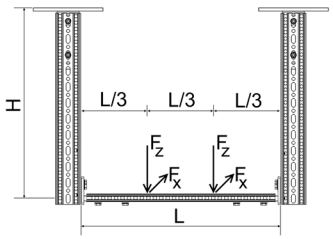

H_{max} \ L_{max}	500		1000		1500		2000		2500		3000	
	$F_{z,\,perm}$ for		$F_{z,\,perm}$ for		$F_{z,\,perm}$ for		$F_{z,\,perm}$ for		$F_{z,\,perm}$ for		$F_{z,\,perm}$ for	
	$F_x = 0$	$F_x = \mu_0 * F_z$	$F_x = 0$	$F_x = \mu_0 * F_z$	$F_x = 0$	$F_x = \mu_0 * F_z$	$F_x = 0$	$F_x = \mu_0 * F_z$	$F_x = 0$	$F_x = \mu_0 * F_z$	$F_x = 0$	$F_x = \mu_0 * F_z$
[mm]	[kN]	[kN]	[kN]	[kN]	[kN]	[kN]	[kN]	[kN]	[kN]	[kN]	[kN]	[kN]
500	**4,17**	**3,48**	**2,20**	**2,07**	**1,13**	**1,06**	**0,69**	**0,65**	**0,46**	**0,43**	**0,30**	**0,28**
1000	**4,17**	**3,48**	**2,19**	**2,06**	**1,12**	**1,06**	**0,68**	**0,64**	**0,45**	**0,43**	**0,30**	**0,28**
1500	**4,17**	**2,85**	**2,17**	**2,04**	**1,12**	**1,05**	**0,68**	**0,64**	**0,45**	**0,42**	**0,30**	**0,28**
2000	**4,17**	**1,93**	**2,16**	**1,91**	**1,11**	**1,04**	**0,68**	**0,64**	**0,45**	**0,42**	**0,30**	**0,28**

F_z [kN] as permanent loads at distance 2*L/3 and L/3; F_x [kN] as variable loads at distance 2*L/3 and L/3.

3 Point Loads

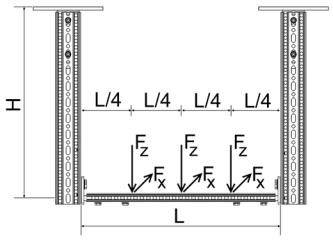

H_{max} \ L_{max}	500		1000		1500		2000		2500		3000	
	$F_{z,\,perm}$ for		$F_{z,\,perm}$ for		$F_{z,\,perm}$ for		$F_{z,\,perm}$ for		$F_{z,\,perm}$ for		$F_{z,\,perm}$ for	
	$F_x = 0$	$F_x = \mu_0 * F_z$	$F_x = 0$	$F_x = \mu_0 * F_z$	$F_x = 0$	$F_x = \mu_0 * F_z$	$F_x = 0$	$F_x = \mu_0 * F_z$	$F_x = 0$	$F_x = \mu_0 * F_z$	$F_x = 0$	$F_x = \mu_0 * F_z$
[mm]	[kN]	[kN]	[kN]	[kN]	[kN]	[kN]	[kN]	[kN]	[kN]	[kN]	[kN]	[kN]
500	**2,78**	**2,32**	**1,56**	**1,47**	**0,80**	**0,75**	**0,49**	**0,46**	**0,32**	**0,30**	**0,21**	**0,20**
1000	**2,78**	**2,32**	**1,55**	**1,46**	**0,79**	**0,75**	**0,49**	**0,46**	**0,31**	**0,30**	**0,21**	**0,20**
1500	**2,78**	**1,90**	**1,54**	**1,45**	**0,79**	**0,74**	**0,49**	**0,46**	**0,31**	**0,29**	**0,21**	**0,19**
2000	**2,78**	**1,29**	**1,53**	**1,27**	**0,79**	**0,74**	**0,48**	**0,46**	**0,31**	**0,29**	**0,21**	**0,19**

F_z [kN] as permanent loads at distance 3*L/4, L/2 and L/4; F_x [kN] as variable loads at distance 3*L/4, L/4 and L/4.

All illustrated structures are able to be installed standing as well.
Friction coefficient μ_0 = 0,2 for friction in longitudinal direction. Max. deviation H/100; L/200.

Working loads in accordance with Eurocode 3

Joining Beam Bracket F 80/30 horizontal

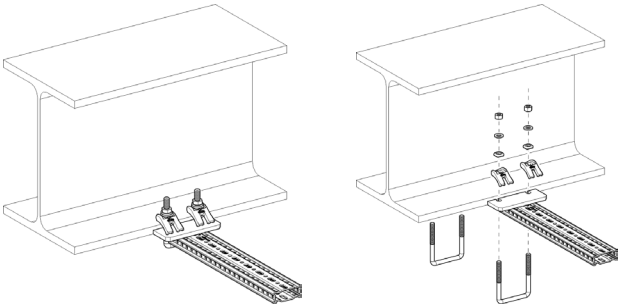

Part List
1 x Beam Section TP F 80/30
2 x U-Holder SB F 80/30-40

Distributed Load

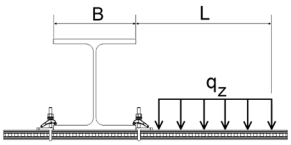

L_{max}	$q_{z, perm}$	F_z ($q_{z, perm}$ * L)
[mm]	[kN/m]	[kN]
300	**10,62**	**3,19**
500	**3,68**	**1,84**
700	**1,84**	**1,29**
900	**1,09**	**0,98**
1100	**0,72**	**0,79**

q_z [kN/m] as permanent load over L;
80 mm < B < 200 mm.

Point Load

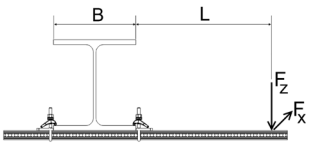

L_{max}	$F_{z, perm}$ for $F_x = 0$	$F_{z, perm}$ for $F_x = \mu_0 * F_z$
[mm]	[kN]	[kN]
300	**1,52**	**0,86**
500	**0,91**	**0,74**
700	**0,65**	**0,59**
900	**0,50**	**0,46**
1100	**0,35**	**0,35**

F_z [kN] as a permanent load at distance L; F_x [kN] as a variable load at distance L;
80 mm < B < 200 mm.

2 Point Loads

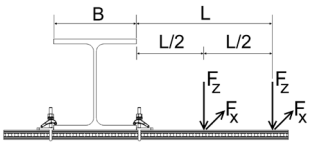

L_{max}	$F_{z, perm}$ for $F_x = 0$	$F_{z, perm}$ for $F_x = \mu_0 * F_z$
[mm]	[kN]	[kN]
300	**1,01**	**0,54**
500	**0,61**	**0,47**
700	**0,43**	**0,39**
900	**0,33**	**0,31**
1100	**0,27**	**0,25**

F_z [kN] as permanent loads at distance L and L/2; F_x [kN] as variable loads at distance L and L/2;
80 mm < B < 200 mm.

3 Point Loads

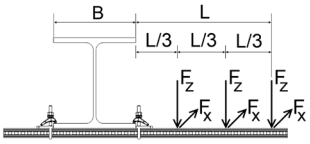

L_{max}	$F_{z, perm}$ for $F_x = 0$	$F_{z, perm}$ for $F_x = \mu_0 * F_z$
[mm]	[kN]	[kN]
300	**0,76**	**0,39**
500	**0,45**	**0,34**
700	**0,32**	**0,30**
900	**0,25**	**0,23**
1100	**0,20**	**0,19**

F_z [kN] as permanent loads at distance L, 2*L/3 and L/3; F_x [kN] as variable loads at distance L, 2*L/3 and L/3; 80 mm < B < 200 mm.

Friction coefficient μ_0 = 0,2 for friction in longitudinal direction. Max. deviation L/100.

Working loads in accordance with Eurocode 3

Beam Section TP F 80

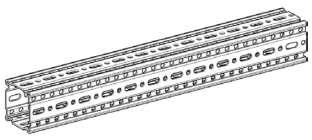

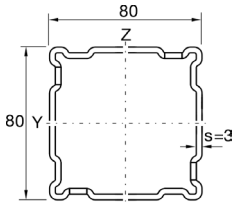

Single-span beam with uniaxial load
dead weight of the profile is considered

Distributed Load

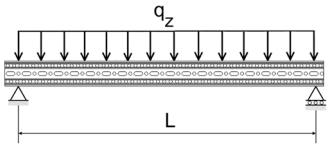

L_{max}	$q_{z, perm}$	F_z ($q_{z, perm}$ * L)
[mm]	[kN/m]	[kN]
1000	**30,21**	**30,21**
1500	**13,38**	**20,07**
2000	**6,30**	**12,59**
2500	**3,22**	**8,06**
3000	**1,87**	**5,60**
3500	**1,17**	**4,11**

q_z [kN/m] as permanent load over L.

Point Load

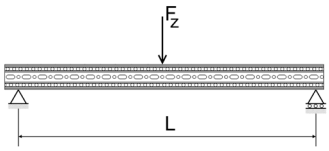

L_{max}	$F_{z, perm}$
[mm]	[kN]
1000	**15,10**
1500	**10,04**
2000	**7,49**
2500	**5,04**
3000	**3,50**
3500	**2,57**

F_z [kN] as a permanent load at distance L/2.

2 Point Loads

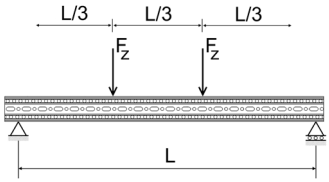

L_{max}	$F_{z, perm}$
[mm]	[kN]
1000	**11,33**
1500	**7,53**
2000	**4,62**
2500	**2,96**
3000	**2,05**
3500	**1,51**

F_z [kN] as permanent loads at distance L/3 and 2*L/3.

3 Point Loads

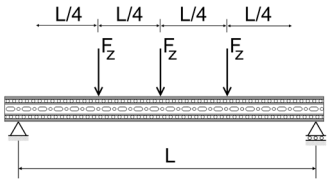

L_{max}	$F_{z, perm}$
[mm]	[kN]
1000	**7,55**
1500	**5,02**
2000	**3,31**
2500	**2,12**
3000	**1,47**
3500	**1,08**

F_z [kN] as permanent loads at distance L/4, L/2 and 3*L/4.

Max. bending L/200.

Working loads in accordance with Eurocode 3

L-Construction TP F 80

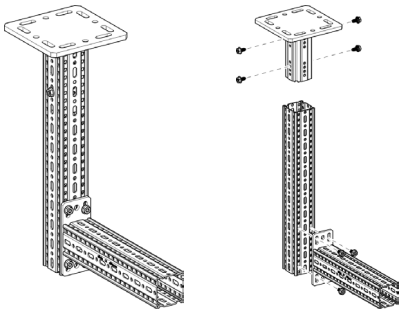

Part List
1 x End Support WBD F 80
1 x Beam Section TP F 80
1 x Cantilever Bracket AK F 80
8 x Self-Forming-Screw FLS F

Distributed Load

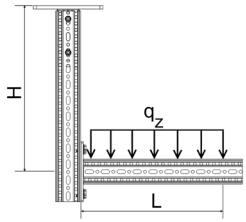

L_{max}	300		500		700	
H_{max}	$q_{z, perm}$	F_z (q_z * L)	$q_{z, perm}$	F_z (q_z * L)	$q_{z, perm}$	F_z (q_z * L)
[mm]	[kN/m]	[kN]	[kN/m]	[kN]	[kN/m]	[kN]
500	**10,42**	**3,13**	**4,07**	**2,03**	**2,10**	**1,47**
1000	**8,25**	**2,47**	**3,25**	**1,62**	**1,69**	**1,18**
1500	**6,82**	**2,05**	**2,70**	**1,35**	**1,40**	**0,98**
2000	**5,81**	**1,74**	**2,31**	**1,15**	**1,20**	**0,84**

q_z [kN/m] as permanent load over L.

Point Load

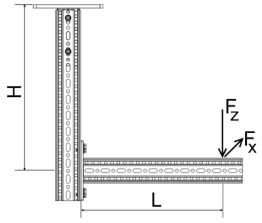

L_{max}	300		500		700	
H_{max}	F_z	$F_x = \mu_0 * F_z$	F_z	$F_x = \mu_0 * F_z$	F_z	$F_x = \mu_0 * F_z$
[mm]	[kN]	[kN]	[kN]	[kN]	[kN]	[kN]
500	**1,70**	**1,70**	**1,06**	**1,06**	**0,75**	**0,75**
1000	**1,36**	**1,36**	**0,85**	**0,85**	**0,60**	**0,60**
1500	**1,13**	**1,13**	**0,71**	**0,71**	**0,50**	**0,50**
2000	**0,96**	**0,96**	**0,61**	**0,61**	**0,43**	**0,43**

F_z [kN] as a permanent load at distance L; F_x [kN] as a variable load at distance L.

2 Point Loads

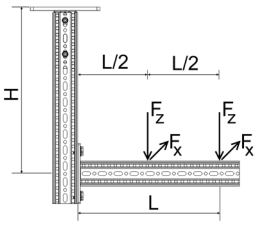

L_{max}	300		500		700	
H_{max}	F_z	$F_x = \mu_0 * F_z$	F_z	$F_x = \mu_0 * F_z$	F_z	$F_x = \mu_0 * F_z$
[mm]	[kN]	[kN]	[kN]	[kN]	[kN]	[kN]
500	**1,11**	**1,11**	**0,70**	**0,70**	**0,50**	**0,50**
1000	**0,88**	**0,88**	**0,56**	**0,56**	**0,40**	**0,40**
1500	**0,73**	**0,73**	**0,47**	**0,47**	**0,34**	**0,34**
2000	**0,63**	**0,63**	**0,40**	**0,40**	**0,29**	**0,29**

F_z [kN] as permanent loads at distance L and L/2; F_x [kN] as variable loads at distance L and L/2.

3 Point Loads

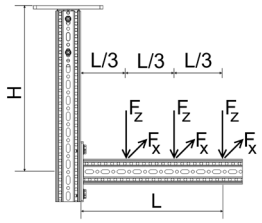

L_{max}	300		500		700	
H_{max}	F_z	$F_x = \mu_0 * F_z$	F_z	$F_x = \mu_0 * F_z$	F_z	$F_x = \mu_0 * F_z$
[mm]	[kN]	[kN]	[kN]	[kN]	[kN]	[kN]
500	**0,82**	**0,82**	**0,52**	**0,52**	**0,37**	**0,37**
1000	**0,65**	**0,65**	**0,41**	**0,41**	**0,30**	**0,30**
1500	**0,54**	**0,54**	**0,35**	**0,35**	**0,25**	**0,25**
2000	**0,46**	**0,46**	**0,30**	**0,30**	**0,21**	**0,21**

F_z [kN] as permanent loads at distance L, 2*L/3 and L/3; F_z [kN] as variable loads at distance L, 2*L/3 and L/3.

All illustrated structures are able to be installed standing as well.
Friction coefficient μ_0 = 0,2 for friction in longitudinal direction. Max. deviation H/100; L/100.

Working loads in accordance with Eurocode 3

T-Support F 80

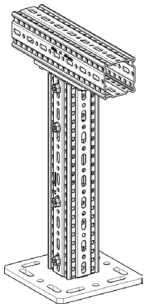

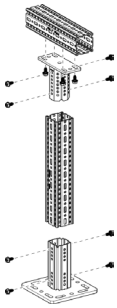

Part List
1 x End Support WBD F 80
2 x Beam Section TP F 80
1 x End Support STA F 80
12 x Self-Forming-Screw FLS F

Distributed Load - symmetrical

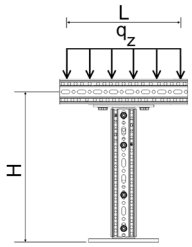

H_{max}	$q_{z, perm}$	F_z ($q_{z, perm}$ x 1m)
[mm]	[kN/m]	[kN]
500	**13,19**	**13,19**
1000	**13,15**	**13,15**
1500	**13,12**	**13,12**
2000	**13,08**	**13,08**

q_z [kN/m] as permanent load over L; L_{max} = 1.100 mm.

Point Load - centrical

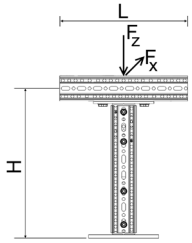

H_{max}	$F_{z, perm}$ for $F_x = 0$	$F_{z, perm}$ for $F_x = \mu_0 * F_z$
[mm]	[kN]	[kN]
500	**11,53**	**8,78**
1000	**11,50**	**3,65**
1500	**10,63**	**2,10**
2000	**9,15**	**1,41**

F_z [kN] as a permanent load; F_x [kN] as a variable load;
central load introduction for planned eccentricity ± 50 mm.

2 Point Loads - symmetrical

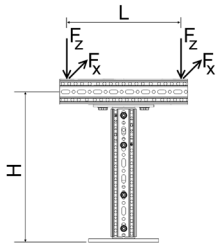

H_{max}	$F_{z, perm}$ for $F_x = 0$	$F_{z, perm}$ for $F_x = \mu_0 * F_z$
[mm]	[kN]	[kN]
500	**6,46**	**4,32**
1000	**6,46**	**1,88**
1500	**6,46**	**1,07**
2000	**6,46**	**0,71**

F_z [kN] as permanent loads; F_x [kN] as variable loads; L_{max} = 1.100 mm.

3 Point Loads - symmetrical

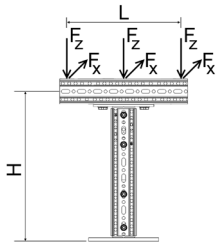

H_{max}	$F_{z, perm}$ for $F_x = 0$	$F_{z, perm}$ for $F_x = \mu_0 * F_z$
[mm]	[kN]	[kN]
500	**4,39**	**3,16**
1000	**4,38**	**1,25**
1500	**4,37**	**0,71**
2000	**4,36**	**0,47**

F_z [kN] as permanent loads; F_x [kN] as variable loads; L_{max} = 1.100 mm.

Friction coefficient μ_0= 0,2 for friction in longitudinal direction. Max. deviation H/150.

Working loads in accordance with Eurocode 3

Frame F 80

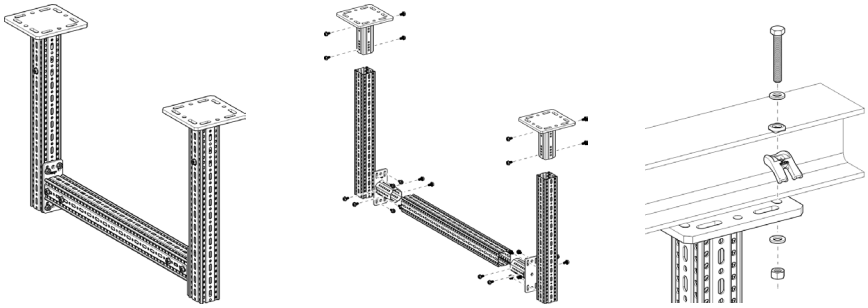

Part List
2 x End Support WBD F 80
3 x Beam Section TP F 80
2 x End Support STA F 80
24 x Self-Forming-Screw FLS

Distributed Load

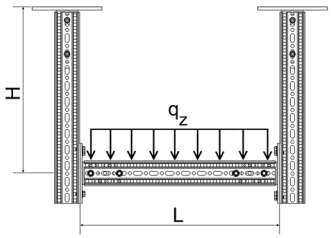

H_{max} \ L_{max}	500		1000		1500		2000		2500		3000	
	$q_{z,perm}$	F_z (q_z * L)	$q_{z,perm}$	F_z (q_z * L)	$q_{z,perm}$	F_z (q_z * L)	$q_{z,perm}$	F_z (q_z * L)	$q_{z,perm}$	F_z (q_z * L)	$q_{z,perm}$	F_z (q_z * L)
[mm]	[kN/m]	[kN]	[kN/m]	[kN]	[kN/m]	[kN]	[kN/m]	[kN]	[kN/m]	[kN]	[kN/m]	[kN]
1000	**39,47**	**19,37**	**19,37**	**19,37**	**12,56**	**18,85**	**6,76**	**13,52**	**3,89**	**9,71**	**2,43**	**7,30**
1500	**39,47**	**19,37**	**19,37**	**19,37**	**12,66**	**18,99**	**6,65**	**13,29**	**3,82**	**9,55**	**2,39**	**7,18**
2000	**39,47**	**19,37**	**19,37**	**19,37**	**12,56**	**18,83**	**6,55**	**13,09**	**3,76**	**9,41**	**2,36**	**7,07**
2500	**39,47**	**19,37**	**19,37**	**19,37**	**12,43**	**18,64**	**6,46**	**12,91**	**3,71**	**9,28**	**2,32**	**6,97**
3000	**39,47**	**19,37**	**19,37**	**19,37**	**12,27**	**18,40**	**6,38**	**12,75**	**3,67**	**9,16**	**2,29**	**6,88**

q_z [kN/m] as permanent load over L.

Point Load

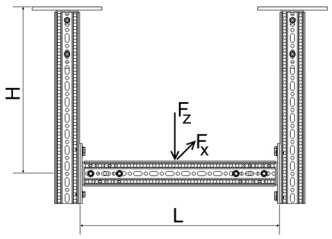

H_{max} \ L_{max}	500		1000		1500		2000		2500		3000	
	$F_{z,perm}$ for		$F_{z,perm}$ for		$F_{z,perm}$ for		$F_{z,perm}$ for		$F_{z,perm}$ for		$F_{z,perm}$ for	
	$F_x = 0$	$F_x = \mu_0 * F_z$	$F_x = 0$	$F_x = \mu_0 * F_z$	$F_x = 0$	$F_x = \mu_0 * F_z$	$F_x = 0$	$F_x = \mu_0 * F_z$	$F_x = 0$	$F_x = \mu_0 * F_z$	$F_x = 0$	$F_x = \mu_0 * F_z$
[mm]	[kN]	[kN]	[kN]	[kN]	[kN]	kN]	[kN]	[kN]	[kN]	[kN]	[kN]	[kN]
1000	**19,67**	**9,02**	**16,21**	**8,76**	**11,21**	**8,18**	**8,63**	**6,56**	**6,08**	**5,38**	**4,52**	**4,25**
1500	**19,67**	**5,49**	**16,13**	**5,42**	**11,15**	**5,26**	**8,51**	**5,00**	**5,99**	**4,63**	**4,45**	**4,18**
2000	**19,67**	**3,74**	**16,04**	**3,72**	**11,09**	**3,66**	**8,40**	**3,56**	**5,92**	**3,41**	**4,39**	**3,22**
2500	**19,67**	**2,74**	**15,96**	**2,73**	**11,04**	**2,70**	**8,31**	**2,65**	**5,85**	**2,59**	**4,34**	**2,49**
3000	**19,67**	**2,09**	**15,89**	**2,09**	**10,98**	**2,08**	**8,22**	**2,05**	**5,78**	**2,02**	**4,29**	**1,97**

F_z [kN] as a permanent load at distance L/2; F_x [kN] as a variable load at distance L/2.

2 Point Loads

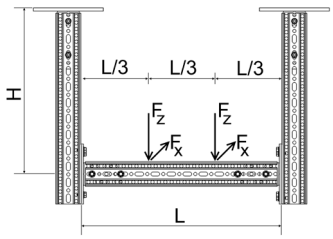

H_{max} \ L_{max}	500		1000		1500		2000		2500		3000	
	$F_{z,perm}$ for		$F_{z,perm}$ for		$F_{z,perm}$ for		$F_{z,perm}$ for		$F_{z,perm}$ for		$F_{z,perm}$ for	
	$F_x = 0$	$F_x = \mu_0 * F_z$	$F_x = 0$	$F_x = \mu_0 * F_z$	$F_x = 0$	$F_x = \mu_0 * F_z$	$F_x = 0$	$F_x = \mu_0 * F_z$	$F_x = 0$	$F_x = \mu_0 * F_z$	$F_x = 0$	$F_x = \mu_0 * F_z$
[mm]	[kN]	[kN]	[kN]	[kN]	[kN]	kN]	[kN]	[kN]	[kN]	[kN]	[kN]	[kN]
1000	**9,85**	**4,52**	**9,60**	**4,40**	**7,61**	**4,15**	**5,10**	**3,76**	**3,61**	**3,27**	**2,69**	**2,53**
1500	**9,85**	**2,75**	**9,60**	**2,72**	**7,49**	**2,65**	**5,02**	**2,53**	**3,55**	**2,37**	**2,65**	**2,17**
2000	**9,85**	**1,87**	**9,60**	**1,86**	**7,38**	**1,84**	**4,95**	**1,79**	**3,51**	**1,73**	**2,61**	**1,64**
2500	**9,85**	**1,37**	**9,60**	**1,36**	**7,29**	**1,35**	**4,89**	**1,33**	**3,46**	**1,30**	**2,58**	**1,26**
3000	**9,85**	**1,05**	**9,60**	**1,04**	**7,20**	**1,04**	**4,83**	**1,03**	**3,42**	**1,01**	**2,55**	**0,99**

F_z [kN] as permanent loads at distance 2*L/3 and L/3; F_x [kN] as variable loads at distance 2*L/3 and L/3.

3 Point Loads

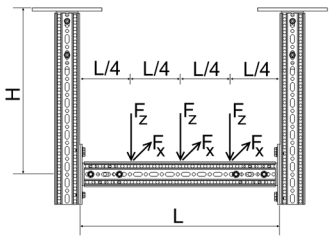

H_{max} \ L_{max}	500		1000		1500		2000		2500		3000	
	$F_{z,perm}$ for		$F_{z,perm}$ for		$F_{z,perm}$ for		$F_{z,perm}$ for		$F_{z,perm}$ for		$F_{z,perm}$ for	
	$F_x = 0$	$F_x = \mu_0 * F_z$	$F_x = 0$	$F_x = \mu_0 * F_z$	$F_x = 0$	$F_x = \mu_0 * F_z$	$F_x = 0$	$F_x = \mu_0 * F_z$	$F_x = 0$	$F_x = \mu_0 * F_z$	$F_x = 0$	$F_x = \mu_0 * F_z$
[mm]	[kN]	[kN]	[kN]	[kN]	[kN]	kN]	[kN]	[kN]	[kN]	[kN]	[kN]	[kN]
1000	**6,57**	**3,01**	**6,42**	**2,94**	**5,37**	**2,78**	**3,63**	**2,54**	**2,58**	**2,22**	**1,93**	**1,81**
1500	**6,57**	**1,83**	**6,42**	**1,81**	**5,29**	**1,77**	**3,57**	**1,70**	**2,54**	**1,60**	**1,90**	**1,47**
2000	**6,57**	**1,25**	**6,42**	**1,24**	**5,21**	**1,23**	**3,52**	**1,20**	**2,50**	**1,16**	**1,87**	**1,10**
2500	**6,57**	**0,91**	**6,42**	**0,91**	**5,14**	**0,90**	**3,48**	**0,89**	**2,47**	**0,87**	**1,85**	**0,85**
3000	**6,57**	**0,70**	**6,42**	**0,70**	**5,08**	**0,69**	**3,44**	**0,69**	**2,44**	**0,68**	**1,82**	**0,66**

F_z [kN] as permanent loads at distance 3*L/4, L/2 and L/4; F_x [kN] as variable loads at distance 3*L/4, L/4 and L/4.

All illustrated structures are able to be installed standing as well.
Friction coefficient μ_0 = 0,2 for friction in longitudinal direction. Max. deviation H/100; L/200.

Working loads in accordance with Eurocode 3

Joining Beam Bracket F 80 horizontal

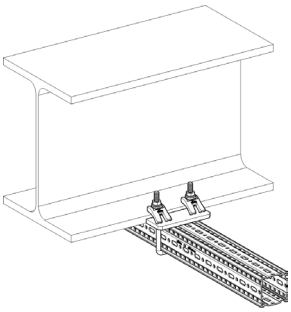

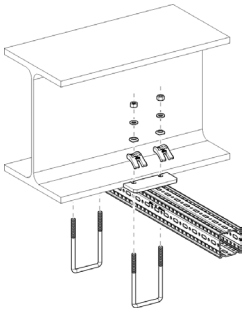

Part List
1 x Beam Section TP F 80
2 x U-Holder SB F 80-40

Distributed Load

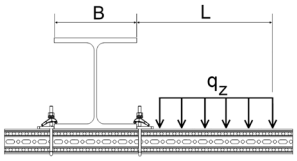

L_{max} \ B	100		150		200		250		300	
	$q_{z,\,perm}$	F_z (q_z * L)	$q_{z,\,perm}$	F_z (q_z * L)	$q_{z,\,perm}$	F_z (q_z * L)	$q_{z,\,perm}$	F_z (q_z * L)	$q_{z,\,perm}$	F_z (q_z * L)
[mm]	[kN/m]	[kN]	[kN/m]	[kN]	[kN/m]	[kN]	[kN/m]	[kN]	[kN/m]	[kN]
300	**14,39**	**4,32**	**20,42**	**6,13**	**24,82**	**7,45**	**28,17**	**8,45**	**30,72**	**9,22**
500	**5,64**	**2,82**	**8,38**	**4,19**	**10,53**	**5,26**	**12,27**	**6,13**	**12,28**	**6,14**
700	**3,02**	**2,12**	**4,62**	**3,23**	**5,93**	**4,15**	**6,19**	**4,34**	**6,19**	**4,34**
900	**1,88**	**1,69**	**2,93**	**2,64**	**3,72**	**3,35**	**3,72**	**3,35**	**3,72**	**3,35**
1100	**1,28**	**1,41**	**2,02**	**2,22**	**2,47**	**2,72**	**2,47**	**2,72**	**2,47**	**2,72**

q_z [kN/m] as permanent load over L.

Point Load

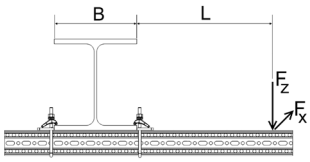

L_{max} \ B	100		150		200		250		300	
	$F_{z,\,perm}$ for		$F_{z,\,perm}$ for		$F_{z,\,perm}$ for		$F_{z,\,perm}$ for		$F_{z,\,perm}$ for	
	$F_x = 0$	$F_x = \mu_0 * F_z$	$F_x = 0$	$F_x = \mu_0 * F_z$	$F_x = 0$	$F_x = \mu_0 * F_z$	$F_x = 0$	$F_x = \mu_0 * F_z$	$F_x = 0$	$F_x = \mu_0 * F_z$
[mm]	[kN]	[kN]	[kN]	[kN]	[kN]	[kN]	[kN]	[kN]	[kN]	[kN]
300	**2,36**	**1,12**	**3,51**	**1,67**	**4,43**	**2,10**	**5,04**	**2,45**	**5,04**	**2,75**
500	**1,55**	**0,74**	**2,41**	**1,14**	**3,02**	**1,49**	**3,02**	**1,79**	**3,02**	**2,05**
700	**1,16**	**0,55**	**1,83**	**0,87**	**2,16**	**1,15**	**2,16**	**1,41**	**2,16**	**1,63**
900	**0,92**	**0,44**	**1,48**	**0,70**	**1,68**	**0,94**	**1,68**	**1,16**	**1,68**	**1,36**
1100	**0,77**	**0,36**	**1,24**	**0,59**	**1,37**	**0,79**	**1,37**	**0,99**	**1,37**	**1,16**

F_z [kN] as a permanent load at distance L; F_x [kN] as a variable load at distance L.

2 Point Loads

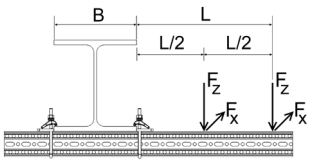

L_{max} \ B	100		150		200		250		300	
	$F_{z,\,perm}$ for		$F_{z,\,perm}$ for		$F_{z,\,perm}$ for		$F_{z,\,perm}$ for		$F_{z,\,perm}$ for	
	$F_x = 0$	$F_x = \mu_0 * F_z$	$F_x = 0$	$F_x = \mu_0 * F_z$	$F_x = 0$	$F_x = \mu_0 * F_z$	$F_x = 0$	$F_x = \mu_0 * F_z$	$F_x = 0$	$F_x = \mu_0 * F_z$
[mm]	[kN]	[kN]	[kN]	[kN]	[kN]	[kN]	[kN]	[kN]	[kN]	[kN]
300	**1,46**	**0,69**	**2,12**	**1,01**	**2,62**	**1,24**	**3,01**	**1,43**	**3,32**	**1,57**
500	**0,98**	**0,47**	**1,50**	**0,71**	**1,92**	**0,91**	**2,01**	**1,08**	**2,01**	**1,22**
700	**0,74**	**0,35**	**1,16**	**0,55**	**1,44**	**0,72**	**1,44**	**0,86**	**1,44**	**0,99**
900	**0,60**	**0,28**	**0,94**	**0,45**	**1,12**	**0,59**	**1,12**	**0,72**	**1,12**	**0,84**
1100	**0,50**	**0,24**	**0,79**	**0,38**	**0,91**	**0,50**	**0,91**	**0,62**	**0,91**	**0,72**

F_z [kN] as permanent loads at distance L and L/2; F_x [kN] as variable loads at distance L and L/2.

3 Point Loads

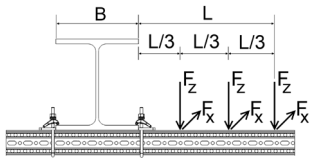

L_{max} \ B	100		150		200		250		300	
	$F_{z,\,perm}$ for		$F_{z,\,perm}$ for		$F_{z,\,perm}$ for		$F_{z,\,perm}$ for		$F_{z,\,perm}$ for	
	$F_x = 0$	$F_x = \mu_0 * F_z$	$F_x = 0$	$F_x = \mu_0 * F_z$	$F_x = 0$	$F_x = \mu_0 * F_z$	$F_x = 0$	$F_x = \mu_0 * F_z$	$F_x = 0$	$F_x = \mu_0 * F_z$
[mm]	[kN]	[kN]	[kN]	[kN]	[kN]	[kN]	[kN]	[kN]	[kN]	[kN]
300	**1,06**	**0,50**	**1,52**	**0,72**	**1,86**	**0,88**	**2,12**	**1,00**	**2,33**	**1,10**
500	**0,72**	**0,34**	**1,08**	**0,52**	**1,38**	**0,65**	**1,51**	**0,77**	**1,51**	**0,87**
700	**0,55**	**0,26**	**0,84**	**0,40**	**1,08**	**0,52**	**1,08**	**0,62**	**1,08**	**0,71**
900	**0,44**	**0,21**	**0,69**	**0,33**	**0,84**	**0,43**	**0,84**	**0,52**	**0,84**	**0,61**
1100	**0,37**	**0,18**	**0,58**	**0,28**	**0,68**	**0,37**	**0,68**	**0,45**	**0,68**	**0,53**

F_z [kN] as permanent loads at distance L, 2*L/3 and L/3; F_z [kN] as variable loads at distance L, 2*L/3 and L/3.

Friction coefficient μ_0 = 0,2 for friction in longitudinal direction. Max. deviation L/100.

Working loads in accordance with Eurocode 3

Joining Beam Bracket F 80 vertical

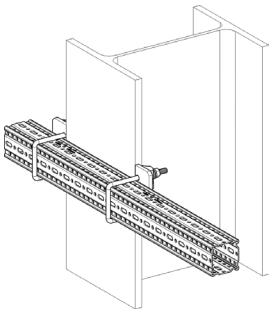

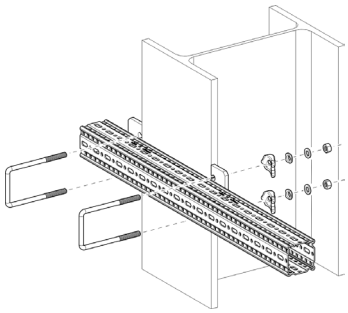

Part List
1 x Beam Section TP F 80
2 x U-Holder SB F 80-40

Distributed Load

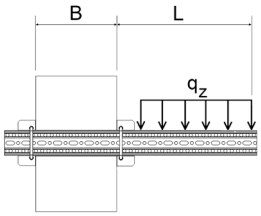

B	100		150		200		250		300	
L_{max}	$q_{z, perm}$	F_z (q_z * L)	$q_{z, perm}$	F_z (q_z * L)	$q_{z, perm}$	F_z (q_z * L)	$q_{z, perm}$	F_z (q_z * L)	$q_{z, perm}$	F_z (q_z * L)
[mm]	[kN/m]	[kN]	[kN/m]	[kN]	[kN/m]	[kN]	[kN/m]	[kN]	[kN/m]	[kN]
300	**3,21**	**0,96**	**4,46**	**1,34**	**5,34**	**1,60**	**5,99**	**1,80**	**6,49**	**1,95**
500	**1,36**	**0,68**	**1,98**	**0,99**	**2,47**	**1,23**	**2,86**	**1,43**	**3,17**	**1,58**
700	**0,75**	**0,52**	**1,13**	**0,79**	**1,44**	**1,00**	**1,69**	**1,18**	**1,91**	**1,34**
900	**0,47**	**0,43**	**0,73**	**0,65**	**0,94**	**0,85**	**1,12**	**1,01**	**1,28**	**1,15**
1100	**0,33**	**0,36**	**0,51**	**0,56**	**0,67**	**0,73**	**0,80**	**0,88**	**0,92**	**1,02**

q_z [kN/m] as permanent load over L.

Point Load

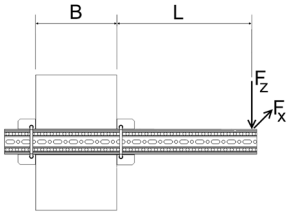

B	100		150		200		250		300	
	$F_{z, perm}$ for		$F_{z, perm}$ for		$F_{z, perm}$ for		$F_{z, perm}$ for		$F_{z, perm}$ for	
L_{max}	$F_x = 0$	$F_x = \mu_0 * F_z$	$F_x = 0$	$F_x = \mu_0 * F_z$	$F_x = 0$	$F_x = \mu_0 * F_z$	$F_x = 0$	$F_x = \mu_0 * F_z$	$F_x = 0$	$F_x = \mu_0 * F_z$
[mm]	[kN]	[kN]	[kN]	[kN]	[kN]	[kN]	[kN]	[kN]	[kN]	[kN]
300	**0,59**	**0,56**	**0,88**	**0,84**	**1,11**	**1,06**	**1,29**	**1,24**	**1,45**	**1,39**
500	**0,39**	**0,37**	**0,60**	**0,58**	**0,79**	**0,75**	**0,94**	**0,90**	**1,08**	**1,03**
700	**0,29**	**0,28**	**0,46**	**0,44**	**0,61**	**0,58**	**0,74**	**0,71**	**0,86**	**0,83**
900	**0,23**	**0,22**	**0,37**	**0,35**	**0,50**	**0,48**	**0,61**	**0,59**	**0,72**	**0,69**
1100	**0,19**	**0,18**	**0,31**	**0,30**	**0,42**	**0,40**	**0,52**	**0,50**	**0,61**	**0,59**

F_z [kN] as a permanent load at distance L; F_x [kN] as a variable load at distance L.

2 Point Loads

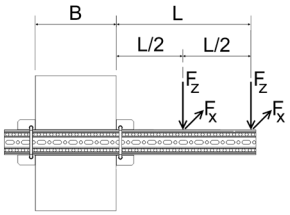

B	100		150		200		250		300	
	$F_{z, perm}$ for		$F_{z, perm}$ for		$F_{z, perm}$ for		$F_{z, perm}$ for		$F_{z, perm}$ for	
L_{max}	$F_x = 0$	$F_x = \mu_0 * F_z$	$F_x = 0$	$F_x = \mu_0 * F_z$	$F_x = 0$	$F_x = \mu_0 * F_z$	$F_x = 0$	$F_x = \mu_0 * F_z$	$F_x = 0$	$F_x = \mu_0 * F_z$
[mm]	[kN]	[kN]	[kN]	[kN]	[kN]	[kN]	[kN]	[kN]	[kN]	[kN]
300	**0,37**	**0,35**	**0,53**	**0,51**	**0,65**	**0,63**	**0,75**	**0,72**	**0,83**	**0,80**
500	**0,25**	**0,24**	**0,37**	**0,36**	**0,48**	**0,46**	**0,57**	**0,54**	**0,64**	**0,62**
700	**0,19**	**0,18**	**0,29**	**0,28**	**0,38**	**0,36**	**0,46**	**0,44**	**0,52**	**0,50**
900	**0,15**	**0,14**	**0,24**	**0,23**	**0,31**	**0,30**	**0,38**	**0,36**	**0,44**	**0,42**
1100	**0,13**	**0,12**	**0,20**	**0,19**	**0,27**	**0,26**	**0,33**	**0,31**	**0,38**	**0,37**

F_z [kN] as permanent loads at distance L and L/2; F_x [kN] as variable loads at distance L and L/2.

3 Point Loads

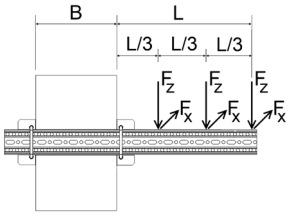

B	100		150		200		250		300	
	$F_{z, perm}$ for		$F_{z, perm}$ for		$F_{z, perm}$ for		$F_{z, perm}$ for		$F_{z, perm}$ for	
L_{max}	$F_x = 0$	$F_x = \mu_0 * F_z$	$F_x = 0$	$F_x = \mu_0 * F_z$	$F_x = 0$	$F_x = \mu_0 * F_z$	$F_x = 0$	$F_x = \mu_0 * F_z$	$F_x = 0$	$F_x = \mu_0 * F_z$
[mm]	[kN]	[kN]	[kN]	[kN]	[kN]	[kN]	[kN]	[kN]	[kN]	[kN]
300	**0,27**	**0,25**	**0,38**	**0,36**	**0,46**	**0,45**	**0,53**	**0,51**	**0,58**	**0,56**
500	**0,18**	**0,17**	**0,27**	**0,26**	**0,35**	**0,33**	**0,41**	**0,39**	**0,46**	**0,44**
700	**0,14**	**0,13**	**0,21**	**0,20**	**0,28**	**0,26**	**0,33**	**0,32**	**0,38**	**0,36**
900	**0,11**	**0,11**	**0,17**	**0,17**	**0,23**	**0,22**	**0,28**	**0,27**	**0,32**	**0,31**
1100	**0,09**	**0,09**	**0,15**	**0,14**	**0,20**	**0,19**	**0,24**	**0,23**	**0,28**	**0,27**

F_z [kN] as permanent loads at distance L, 2*L/3 and L/3; F_z [kN] as variable loads at distance L, 2*L/3 and L/3.

Friction coefficient μ_0 = 0,2 for friction in longitudinal direction. Max. deviation L/100.

Working loads in accordance with Eurocode 3

Beam Bracket F 80 - Variante a) clamped

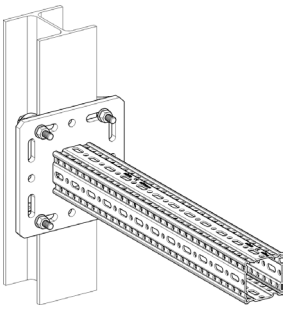

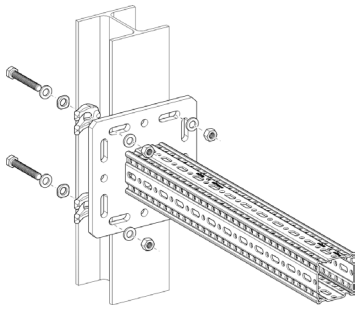

Part List
1 x Beam Bracket TKO F 80
1 x Assembly Set MS 5P M12 S

Distributed Load

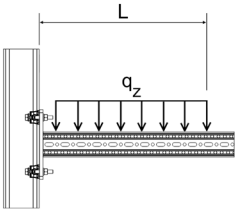

L_{max}	$q_{z, perm}$	F_z ($q_{z, perm}$ * L)
[mm]	[kN/m]	[kN]
300	**54,99**	**16,50**
500	**28,59**	**14,30**
700	**14,59**	**10,21**

q_z [kN/m] as permanent load over L.

Point Load

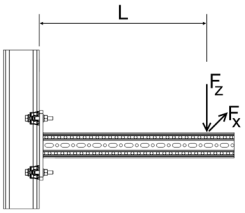

L_{max}	$F_{z, perm}$ for $F_x = 0$	$F_{z, perm}$ for $F_x = \mu_0 * F_z$
[mm]	[kN]	[kN]
300	**11,91**	**7,40**
500	**7,15**	**4,44**
700	**5,04**	**3,17**

F_z [kN] as a permanent load at distance L; F_x [kN] as a variable load at distance L.

2 Point Loads

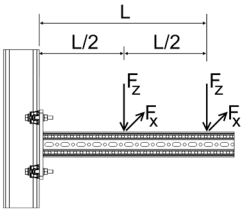

L_{max}	$F_{z, perm}$ for $F_x = 0$	$F_{z, perm}$ for $F_x = \mu_0 * F_z$
[mm]	[kN]	[kN]
300	**7,94**	**4,93**
500	**4,77**	**2,96**
700	**3,40**	**2,11**

F_z [kN] as permanent loads at distance L and L/2; F_x [kN] as variable loads at distance L and L/2.

3 Point Loads

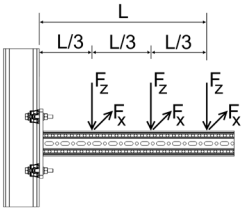

L_{max}	$F_{z, perm}$ for $F_x = 0$	$F_{z, perm}$ for $F_x = \mu_0 * F_z$
[mm]	[kN]	[kN]
300	**5,96**	**3,70**
500	**3,57**	**2,22**
700	**2,55**	**1,58**

F_z [kN] as permanent loads at distance L, 2*L/3 and L/3;
F_x [kN] as variable loads at distance L, 2*L/3 and L/3.

Friction coefficient μ_0 = 0,2 for friction in longitudinal direction. Max. deviation L/100.

Working loads in accordance with Eurocode 3

Beam Bracket F 80 - Variante b) anchored

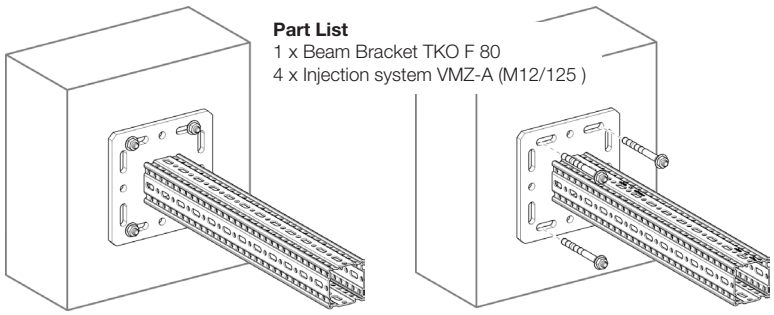

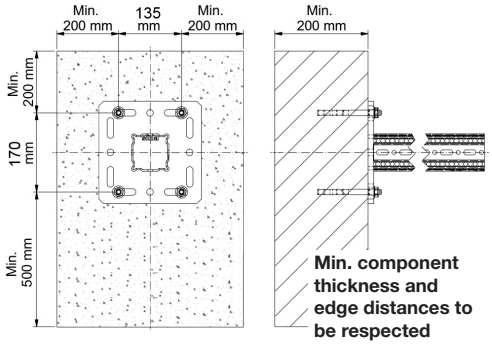

Distributed Load

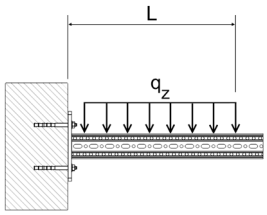

L_{max}	$q_{z,\,perm}$	F_z ($q_{z,\,perm}$ * L)
[mm]	[kN/m]	[kN]
300	**42,31**	**12,69**
500	**21,76**	**10,88**
700	**13,61**	**9,52**

q_z [kN/m] as permanent load at distance L.

Point Load

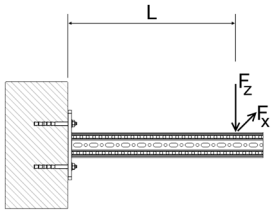

L_{max}	$F_{z,\,perm}$ for $F_x = 0$	$F_{z,\,perm}$ for $F_x = \mu_0 * F_z$
[mm]	[kN]	[kN]
300	**10,16**	**10,16**
500	**7,37**	**7,37**
700	**4,44**	**4,44**

F_z [kN] as a permanent load at distance L; F_x [kN] as a variable load at distance L.

2 Point Loads

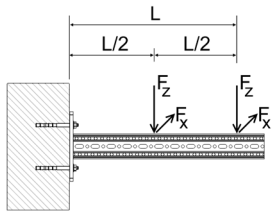

L_{max}	$F_{z,\,perm}$ for $F_x = 0$	$F_{z,\,perm}$ for $F_x = \mu_0 * F_z$
[mm]	[kN]	[kN]
300	**5,64**	**5,64**
500	**4,62**	**4,62**
700	**3,18**	**3,18**

F_z [kN] as permanent loads at distance L and L/2; F_x [kN] as variable loads at distance L and L/2.

3 Point Loads

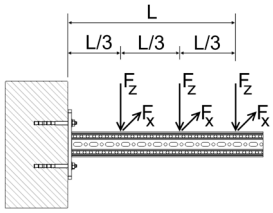

L_{max}	$F_{z,\,perm}$ for $F_x = 0$	$F_{z,\,perm}$ for $F_x = \mu_0 * F_z$
[mm]	[kN]	[kN]
300	**3,91**	**3,91**
500	**3,24**	**3,24**
700	**2,44**	**2,44**

F_z [kN] as permanent loads at distance L, 2*L/3 and L/3;
F_x [kN] as variable loads at distance L, 2*L/3 and L/3.

Friction coefficient μ_0 = 0,2 for friction in longitudinal direction. Max. deviation L/100.

Working loads in accordance with Eurocode 3

Beam Section TP F 100

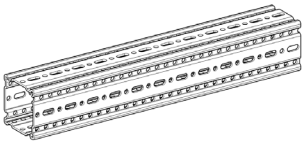

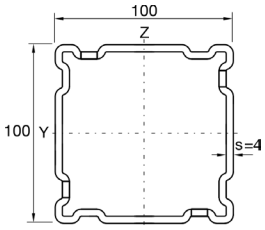

Single-span beam with uniaxial load
dead weight of the profile is considered

Distributed Load

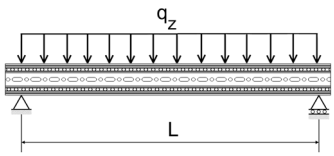

L_{max}	$q_{z, perm}$	F_z ($q_{z, perm}$ * L)
[mm]	[kN/m]	[kN]
1000	**70,50**	**70,50**
2000	**17,53**	**35,06**
3000	**5,37**	**16,11**
4000	**2,27**	**9,06**
5000	**1,16**	**5,80**
6000	**0,67**	**4,03**

q_z [kN/m] as permanent load over L.

Point Load

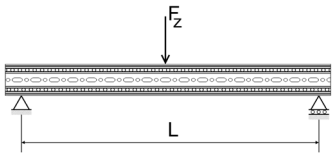

L_{max}	$F_{z, perm}$
[mm]	[kN]
1000	**35,30**
2000	**17,50**
3000	**10,10**
4000	**5,70**
5000	**3,60**
6000	**2,50**

F_z [kN] as a permanent load at L/2.

2 Point Loads

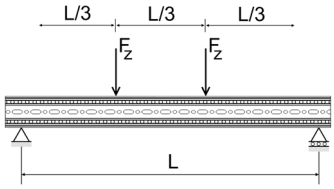

L_{max}	$F_{z, perm}$
[mm]	[kN]
1000	**26,40**
2000	**13,10**
3000	**5,90**
4000	**3,30**
5000	**2,10**
6000	**1,50**

F_z [kN] as permanent loads at L/3 and 2*L/3.

3 Point Loads

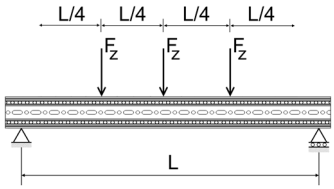

L_{max}	$F_{z, perm}$
[mm]	[kN]
1000	**17,60**
2000	**8,80**
3000	**4,20**
4000	**2,40**
5000	**1,50**
6000	**1,10**

F_z [kN] as permanent loads at L/4, L/2 and 3*L/4.

Max. bending L/200.

Working loads in accordance with Eurocode 3

L-Construction F 100

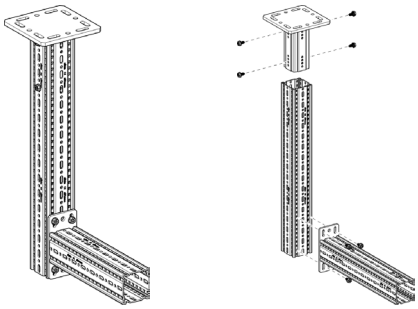

Part List
1 x End Support WBD F 100
1 x Beam Section TP F 100
1 x Cantilever Bracket AK F 100
8 x Self-Forming-Screw FLS F

Distributed Load

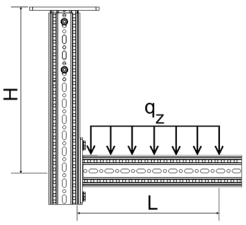

H_{max} \ L_{max}	300		500		700		900		1100	
	$q_{z, perm}$	F_z (q_z * L)	$q_{z, perm}$	F_z (q_z * L)	$q_{z, perm}$	F_z (q_z * L)	$q_{z, perm}$	F_z (q_z * L)	$q_{z, perm}$	F_z (q_z * L)
[mm]	[kN/m]	[kN]	[kN/m]	[kN]	[kN/m]	[kN]	[kN/m]	[kN]	[kN/m]	[kN]
1000	**18,91**	**5,67**	**7,70**	**3,85**	**4,08**	**2,86**	**2,48**	**2,24**	**1,65**	**1,81**
1500	**16,01**	**4,80**	**6,55**	**3,28**	**3,48**	**2,44**	**2,12**	**1,91**	**1,40**	**1,55**
2000	**13,88**	**4,16**	**5,70**	**2,85**	**3,03**	**2,12**	**1,85**	**1,66**	**1,22**	**1,34**
2500	**12,25**	**3,67**	**5,04**	**2,52**	**2,68**	**1,88**	**1,63**	**1,47**	**1,08**	**1,18**

q_z [kN/m] as permanent load over L.

Point Load

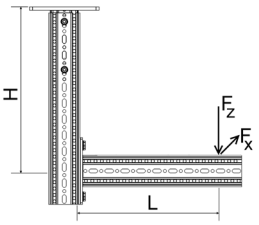

H_{max} \ L_{max}	300		500		700		900		1100	
	$F_{z, perm}$ for		$F_{z, perm}$ for		$F_{z, perm}$ for		$F_{z, perm}$ for		$F_{z, perm}$ for	
	$F_x = 0$	$F_x = \mu_0 * F_z$	$F_x = 0$	$F_x = \mu_0 * F_z$	$F_x = 0$	$F_x = \mu_0 * F_z$	$F_x = 0$	$F_x = \mu_0 * F_z$	$F_x = 0$	$F_x = \mu_0 * F_z$
[mm]	[kN]	[kN]	[kN]	[kN]	[kN]	[kN]	[kN]	[kN]	[kN]	[kN]
1000	**3,20**	**3,20**	**2,05**	**2,05**	**1,48**	**1,48**	**1,14**	**1,14**	**0,91**	**0,91**
1500	**2,72**	**2,72**	**1,75**	**1,75**	**1,27**	**1,27**	**0,98**	**0,98**	**0,78**	**0,78**
2000	**2,37**	**2,37**	**1,53**	**1,53**	**1,11**	**1,11**	**0,85**	**0,85**	**0,68**	**0,68**
2500	**2,09**	**2,09**	**1,36**	**1,36**	**0,98**	**0,98**	**0,76**	**0,76**	**0,60**	**0,60**

F_z [kN] as a permanent load at distance L; F_x [kN] as a variable load at distance L.

2 Point Loads

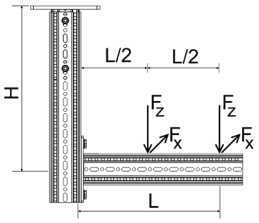

H_{max} \ L_{max}	300		500		700		900		1100	
	$F_{z, perm}$ for		$F_{z, perm}$ for		$F_{z, perm}$ for		$F_{z, perm}$ for		$F_{z, perm}$ for	
	$F_x = 0$	$F_x = \mu_0 * F_z$	$F_x = 0$	$F_x = \mu_0 * F_z$	$F_x = 0$	$F_x = \mu_0 * F_z$	$F_x = 0$	$F_x = \mu_0 * F_z$	$F_x = 0$	$F_x = \mu_0 * F_z$
[mm]	[kN]	[kN]	[kN]	[kN]	[kN]	[kN]	[kN]	[kN]	[kN]	[kN]
1000	**2,07**	**2,03**	**1,35**	**1,35**	**0,98**	**0,98**	**0,76**	**0,76**	**0,61**	**0,61**
1500	**1,75**	**1,75**	**1,15**	**1,15**	**0,84**	**0,84**	**0,65**	**0,65**	**0,52**	**0,52**
2000	**1,52**	**1,52**	**1,00**	**1,00**	**0,73**	**0,73**	**0,57**	**0,57**	**0,46**	**0,46**
2500	**1,35**	**1,35**	**0,89**	**0,89**	**0,65**	**0,65**	**0,50**	**0,50**	**0,40**	**0,40**

F_z [kN] as permanent loads at distance L and L/2; F_x [kN] as variable loads at distance L and L/2.

3 Point Loads

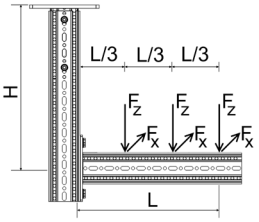

H_{max} \ L_{max}	300		500		700		900		1100	
	$F_{z, perm}$ for		$F_{z, perm}$ for		$F_{z, perm}$ for		$F_{z, perm}$ for		$F_{z, perm}$ for	
	$F_x = 0$	$F_x = \mu_0 * F_z$	$F_x = 0$	$F_x = \mu_0 * F_z$	$F_x = 0$	$F_x = \mu_0 * F_z$	$F_x = 0$	$F_x = \mu_0 * F_z$	$F_x = 0$	$F_x = \mu_0 * F_z$
[mm]	[kN]	[kN]	[kN]	[kN]	[kN]	[kN]	[kN]	[kN]	[kN]	[kN]
1000	**1,51**	**1,44**	**0,99**	**0,99**	**0,73**	**0,73**	**0,56**	**0,56**	**0,45**	**0,45**
1500	**1,28**	**1,27**	**0,85**	**0,85**	**0,62**	**0,62**	**0,48**	**0,48**	**0,39**	**0,39**
2000	**1,12**	**1,12**	**0,74**	**0,74**	**0,54**	**0,54**	**0,42**	**0,42**	**0,34**	**0,34**
2500	**0,99**	**0,99**	**0,65**	**0,65**	**0,48**	**0,48**	**0,37**	**0,37**	**0,30**	**0,30**

F_z [kN] as permanent loads at distance L, 2*L/3 and L/3; F_x [kN] as variable loads at distance L, 2*L/3 and L/3.

All illustrated structures are able to be installed standing as well.
Friction coefficient μ_0 = 0,2 for friction in longitudinal direction. Max. deviation H/100; L/100.

Working loads in accordance with Eurocode 3

T-Support F 100

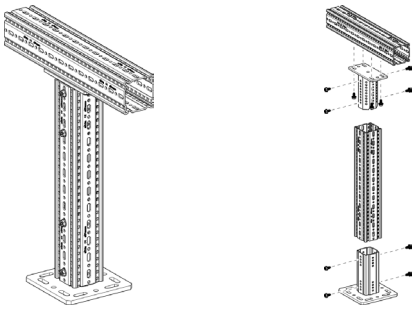

Part List
1 x End Support WBD F 100
2 x Beam Section TP F 100
1 x End Support STA F 100
12 x Self-Forming-Screw FLS F

Distributed Load - symmetrical

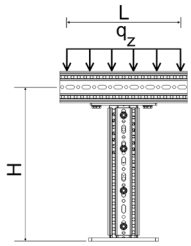

H_{max}	$q_{z, perm}$	F_z ($q_{z, perm}$ * 1m)
[mm]	[kN/m]	[kN]
1000	**13,98**	**13,98**
1500	**13,92**	**13,92**
2000	**13,86**	**13,86**
2500	**13,80**	**13,80**

q_z [kN/m] as permanent load over L;
L_{max} = 1.100 mm.

Point Load - centrical

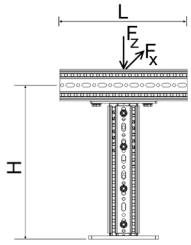

H_{max}	$F_{z, perm}$ for $F_x = 0$	$F_{z, perm}$ for $F_x = \mu_0 * F_z$
[mm]	[kN]	[kN]
1000	**12,85**	**7,68**
1500	**12,80**	**4,53**
2000	**12,74**	**3,07**
2500	**12,69**	**2,24**

F_z [kN] as a permanent load; F_x [kN] as a variable load;
Central load introduction for planned eccentricity ± 50 mm.

2 Point Loads - symmetrical

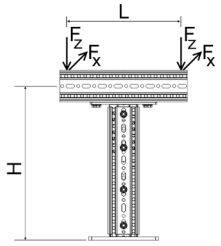

H_{max}	$F_{z, perm}$ for $F_x = 0$	$F_{z, perm}$ for $F_x = \mu_0 * F_z$
[mm]	[kN]	[kN]
1000	**6,98**	**4,36**
1500	**6,95**	**2,53**
2000	**6,92**	**1,70**
2500	**6,89**	**1,24**

F_z [kN] as permanent loads; F_x [kN] as variable loads;
L_{max} = 1.100 mm.

3 Point Loads - symmetrical

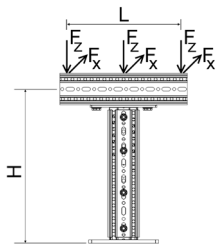

H_{max}	$F_{z, perm}$ for $F_x = 0$	$F_{z, perm}$ for $F_x = \mu_0 * F_z$
[mm]	[kN/m]	[kN]
1000	**4,65**	**2,91**
1500	**4,63**	**1,69**
2000	**4,61**	**1,13**
2500	**4,59**	**0,82**

F_z [kN] as permanent loads; F_x [kN] as variable loads;
L_{max} = 1.100 mm.

Friction coefficient μ_0 = 0,2 for friction in longitudinal direction. Max. deviation H/150.

Working loads in accordance with Eurocode 3

Frame F 100

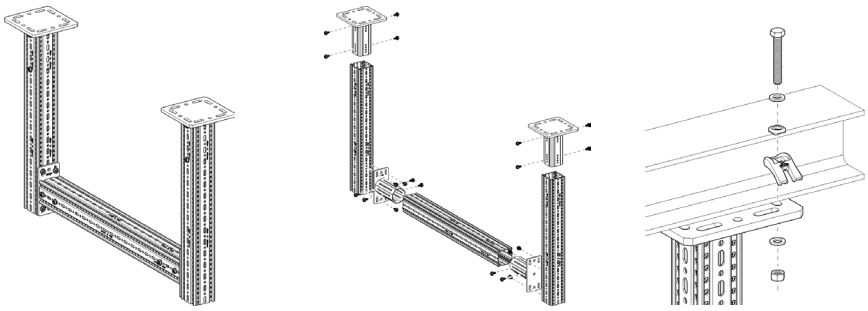

Part List
2 x End Support WBD F 100
3 x Beam Section TP F 100
2 x End Support STA F 100
24 x Self-Forming-Screw FLS F

Distributed Load

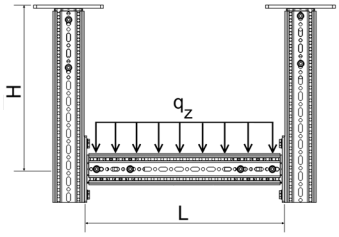

L_{max}	1500		2000		2500		3000		3500		4000	
H_{max}	$q_{z,perm}$	F_z (q_z * L)	$q_{z,perm}$	F_z (q_z * L)	$q_{z,perm}$	F_z (q_z * L)	$q_{z,perm}$	F_z (q_z * L)	$q_{z,perm}$	F_z (q_z * L)	$q_{z,perm}$	F_z (q_z * L)
[mm]	[kN/m]	[kN]	[kN/m]	[kN]	[kN/m]	[kN]	[kN/m]	[kN]	[kN/m]	[kN]	[kN/m]	[kN]
1500	**16,48**	**24,72**	**12,29**	**24,57**	**9,75**	**24,38**	**6,23**	**18,70**	**4,18**	**14,63**	**2,94**	**11,78**
2000	**16,42**	**24,63**	**12,23**	**24,46**	**9,70**	**24,24**	**6,16**	**18,49**	**4,13**	**14,47**	**2,91**	**11,64**
2500	**16,38**	**24,57**	**12,18**	**24,37**	**9,65**	**24,12**	**6,10**	**18,29**	**4,09**	**14,31**	**2,88**	**11,51**
3000	**16,33**	**24,50**	**12,14**	**24,28**	**9,55**	**23,88**	**6,04**	**18,11**	**4,05**	**14,17**	**2,85**	**11,40**
3500	**16,31**	**24,46**	**12,13**	**24,25**	**9,46**	**23,65**	**5,98**	**17,94**	**4,01**	**14,04**	**2,82**	**11,29**

q_z [kN/m] as permanent load over L.

Point Load

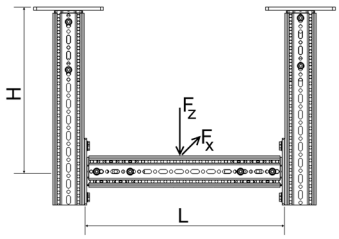

L_{max}	1500		2000		2500		3000		3500		4000	
	$F_{z,perm}$ for		$F_{z,perm}$ for		$F_{z,perm}$ for		$F_{z,perm}$ for		$F_{z,perm}$ for		$F_{z,perm}$ for	
H_{max}	$F_x = 0$	$F_x = \mu_0 * F_z$	$F_x = 0$	$F_x = \mu_0 * F_z$	$F_x = 0$	$F_x = \mu_0 * F_z$	$F_x = 0$	$F_x = \mu_0 * F_z$	$F_x = 0$	$F_x = \mu_0 * F_z$	$F_x = 0$	$F_x = \mu_0 * F_z$
[mm]	[kN]	[kN]	[kN]	[kN]	[kN]	[kN]	[kN]	[kN]	[kN]	[kN]	[kN]	[kN]
1500	**24,61**	**8,39**	**19,50**	**8,39**	**15,77**	**8,23**	**11,76**	**8,23**	**9,11**	**8,09**	**7,28**	**6,94**
2000	**24,51**	**6,33**	**19,43**	**6,24**	**15,62**	**6,24**	**11,65**	**6,15**	**9,02**	**6,07**	**7,21**	**6,07**
2500	**24,39**	**5,21**	**19,34**	**5,15**	**15,48**	**5,09**	**11,54**	**5,09**	**8,94**	**5,03**	**7,14**	**4,98**
3000	**24,36**	**4,33**	**19,26**	**4,29**	**15,35**	**4,25**	**11,44**	**4,21**	**8,86**	**4,21**	**7,08**	**4,17**
3500	**24,33**	**3,75**	**19,20**	**3,75**	**15,23**	**3,72**	**11,35**	**3,68**	**8,79**	**3,66**	**7,02**	**3,63**

F_z [kN] as a permanent load at distance L/2; F_x [kN] as a variable load at distance L/2.

2 Point Loads

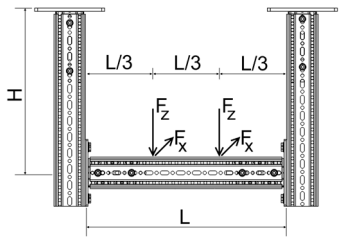

L_{max}	1500		2000		2500		3000		3500		4000	
	$F_{z,perm}$ for		$F_{z,perm}$ for		$F_{z,perm}$ for		$F_{z,perm}$ for		$F_{z,perm}$ for		$F_{z,perm}$ for	
H_{max}	$F_x = 0$	$F_x = \mu_0 * F_z$	$F_x = 0$	$F_x = \mu_0 * F_z$	$F_x = 0$	$F_x = \mu_0 * F_z$	$F_x = 0$	$F_x = \mu_0 * F_z$	$F_x = 0$	$F_x = \mu_0 * F_z$	$F_x = 0$	$F_x = \mu_0 * F_z$
[mm]	[kN]	[kN]	[kN]	[kN]	[kN]	[kN]	[kN]	[kN]	[kN]	[kN]	[kN]	[kN]
1500	**12,32**	**4,16**	**12,22**	**4,13**	**9,29**	**4,10**	**6,96**	**4,06**	**5,41**	**4,03**	**4,33**	**3,98**
2000	**12,27**	**3,18**	**12,15**	**3,16**	**9,19**	**3,14**	**6,89**	**3,12**	**5,35**	**3,09**	**4,28**	**3,06**
2500	**12,23**	**2,58**	**12,11**	**2,57**	**9,10**	**2,55**	**6,82**	**2,53**	**5,30**	**2,51**	**4,24**	**2,49**
3000	**12,21**	**2,17**	**12,05**	**2,16**	**9,02**	**2,15**	**6,76**	**2,13**	**5,25**	**2,12**	**4,20**	**2,10**
3500	**12,19**	**1,87**	**12,03**	**1,86**	**8,94**	**1,86**	**6,70**	**1,84**	**5,20**	**1,83**	**4,16**	**1,82**

F_z [kN] as permanent loads at distance 2*L/3 and L/3; F_x [kN] as variable loads at distance 2*L/3 and L/3.

3 Point Loads

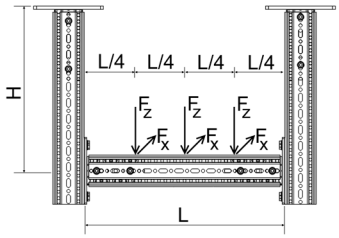

L_{max}	1500		2000		2500		3000		3500		4000	
	$F_{z,perm}$ for		$F_{z,perm}$ for		$F_{z,perm}$ for		$F_{z,perm}$ for		$F_{z,perm}$ for		$F_{z,perm}$ for	
H_{max}	$F_x = 0$	$F_x = \mu_0 * F_z$	$F_x = 0$	$F_x = \mu_0 * F_z$	$F_x = 0$	$F_x = \mu_0 * F_z$	$F_x = 0$	$F_x = \mu_0 * F_z$	$F_x = 0$	$F_x = \mu_0 * F_z$	$F_x = 0$	$F_x = \mu_0 * F_z$
[mm]	[kN]	[kN]	[kN]	[kN]	[kN]	[kN]	[kN]	[kN]	[kN]	[kN]	[kN]	[kN]
1500	**8,22**	**2,77**	**8,16**	**2,75**	**6,62**	**2,73**	**4,97**	**2,71**	**3,87**	**2,69**	**3,11**	**2,66**
2000	**8,19**	**2,12**	**8,11**	**2,11**	**6,55**	**2,10**	**4,92**	**2,08**	**3,83**	**2,06**	**3,07**	**2,05**
2500	**8,16**	**1,72**	**8,08**	**1,71**	**6,48**	**1,70**	**4,87**	**1,69**	**3,79**	**1,68**	**3,04**	**1,66**
3000	**8,14**	**1,45**	**8,05**	**1,44**	**6,42**	**1,43**	**4,83**	**1,42**	**3,76**	**1,41**	**3,01**	**1,40**
3500	**8,13**	**1,25**	**8,03**	**1,24**	**6,37**	**1,24**	**4,79**	**1,23**	**3,72**	**1,22**	**2,98**	**1,21**

F_z [kN] as permanent loads at distance 3*L/4, L/2 and L/4; F_x [kN] as variable loads at distance 3*L/4, L/2 and L/4.

All illustrated structures are able to be installed standing as well.
Friction coefficient μ_0 = 0,2 for friction in longitudinal direction. Max. deviation H/100; L/200.

Working loads in accordance with Eurocode 3

Joining Beam Bracket F 100 horizontal

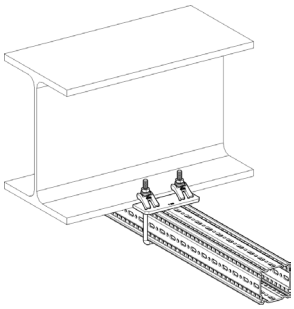

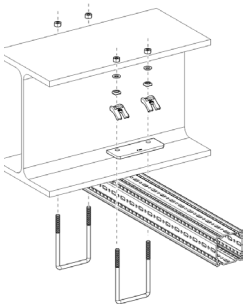

Part List
1 x Beam Section TP F 100
2 x U-Holder SB F 100-40

Distributed Load

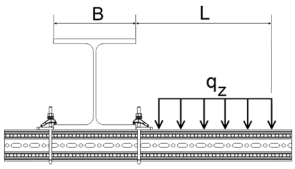

B	100		150		200		250		300	
L_{max}	$q_{z, perm}$	F_z (q_z * L)	$q_{z, perm}$	F_z (q_z * L)	$q_{z, perm}$	F_z (q_z * L)	$q_{z, perm}$	F_z (q_z * L)	$q_{z, perm}$	F_z (q_z * L)
[mm]	[kN/m]	[kN]	[kN/m]	[kN]	[kN/m]	[kN]	[kN/m]	[kN]	[kN/m]	[kN]
300	**14,39**	**4,32**	**20,42**	**6,13**	**24,82**	**7,45**	**28,17**	**8,45**	**30,81**	**9,24**
500	**5,64**	**2,82**	**8,38**	**4,19**	**10,53**	**5,26**	**12,27**	**6,13**	**13,70**	**6,85**
700	**3,02**	**2,12**	**4,62**	**3,23**	**5,93**	**4,15**	**7,03**	**4,92**	**7,96**	**5,58**
900	**1,88**	**1,69**	**2,93**	**2,64**	**3,82**	**3,44**	**4,59**	**4,13**	**5,26**	**4,73**
1100	**1,28**	**1,41**	**2,02**	**2,22**	**2,67**	**2,94**	**3,24**	**3,56**	**3,74**	**4,12**

q_z [kN/m] as permanent load over L.

Point Load

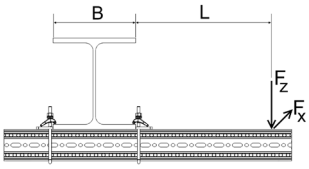

B	100		150		200		250		300	
	$F_{z, perm}$ for		$F_{z, perm}$ for		$F_{z, perm}$ for		$F_{z, perm}$ for		$F_{z, perm}$ for	
L_{max}	$F_x = 0$	$F_x = \mu_0 * F_z$	$F_x = 0$	$F_x = \mu_0 * F_z$	$F_x = 0$	$F_x = \mu_0 * F_z$	$F_x = 0$	$F_x = \mu_0 * F_z$	$F_x = 0$	$F_x = \mu_0 * F_z$
[mm]	[kN]	[kN]	[kN]	[kN]	[kN]	[kN]	[kN]	[kN]	[kN]	[kN]
300	**2,36**	**1,12**	**3,51**	**1,67**	**4,43**	**2,10**	**5,17**	**2,45**	**5,79**	**2,75**
500	**1,55**	**0,74**	**2,41**	**1,14**	**3,14**	**1,49**	**3,77**	**1,79**	**4,32**	**2,05**
700	**1,16**	**0,55**	**1,83**	**0,87**	**2,43**	**1,15**	**2,96**	**1,41**	**3,44**	**1,63**
900	**0,92**	**0,44**	**1,48**	**0,70**	**1,98**	**0,94**	**2,44**	**1,16**	**2,86**	**1,36**
1100	**0,77**	**0,36**	**1,24**	**0,59**	**1,67**	**0,79**	**2,08**	**0,99**	**2,45**	**1,16**

F_z [kN] as a permanent load at distance L; F_x [kN] as a variable load at distance L.

2 Point Loads

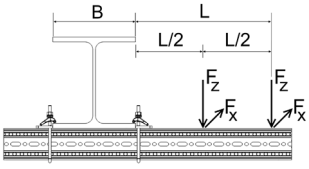

B	100		150		200		250		300	
	$F_{z, perm}$ for		$F_{z, perm}$ for		$F_{z, perm}$ for		$F_{z, perm}$ for		$F_{z, perm}$ for	
L_{max}	$F_x = 0$	$F_x = \mu_0 * F_z$	$F_x = 0$	$F_x = \mu_0 * F_z$	$F_x = 0$	$F_x = \mu_0 * F_z$	$F_x = 0$	$F_x = \mu_0 * F_z$	$F_x = 0$	$F_x = \mu_0 * F_z$
[mm]	[kN]	[kN]	[kN]	[kN]	[kN]	[kN]	[kN]	[kN]	[kN]	[kN]
300	**1,46**	**0,69**	**2,12**	**1,01**	**2,62**	**1,24**	**3,01**	**1,43**	**3,32**	**1,57**
500	**0,98**	**0,47**	**1,50**	**0,71**	**1,92**	**0,91**	**2,27**	**1,08**	**2,57**	**1,22**
700	**0,74**	**0,35**	**1,16**	**0,55**	**1,51**	**0,72**	**1,82**	**0,86**	**2,09**	**0,99**
900	**0,60**	**0,28**	**0,94**	**0,45**	**1,25**	**0,59**	**1,52**	**0,72**	**1,76**	**0,84**
1100	**0,50**	**0,24**	**0,79**	**0,38**	**1,06**	**0,50**	**1,30**	**0,62**	**1,53**	**0,72**

F_z [kN] as permanent loads at distance L and L/2; F_x [kN] as variable loads at distance L and L/2.

3 Point Loads

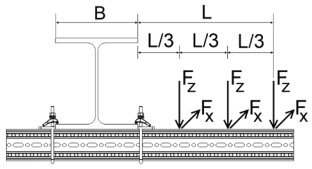

B	100		150		200		250		300	
	$F_{z, perm}$ for		$F_{z, perm}$ for		$F_{z, perm}$ for		$F_{z, perm}$ for		$F_{z, perm}$ for	
L_{max}	$F_x = 0$	$F_x = \mu_0 * F_z$	$F_x = 0$	$F_x = \mu_0 * F_z$	$F_x = 0$	$F_x = \mu_0 * F_z$	$F_x = 0$	$F_x = \mu_0 * F_z$	$F_x = 0$	$F_x = \mu_0 * F_z$
[mm]	[kN]	[kN]	[kN]	[kN]	[kN]	[kN]	[kN]	[kN]	[kN]	[kN]
300	**1,06**	**0,50**	**1,52**	**0,72**	**1,86**	**0,88**	**2,12**	**1,00**	**2,33**	**1,10**
500	**0,72**	**0,34**	**1,08**	**0,52**	**1,38**	**0,65**	**1,62**	**0,77**	**1,82**	**0,87**
700	**0,55**	**0,26**	**0,84**	**0,40**	**1,10**	**0,52**	**1,31**	**0,62**	**1,50**	**0,71**
900	**0,44**	**0,21**	**0,69**	**0,33**	**0,91**	**0,43**	**1,10**	**0,52**	**1,27**	**0,61**
1100	**0,37**	**0,18**	**0,58**	**0,28**	**0,78**	**0,37**	**0,95**	**0,45**	**1,11**	**0,53**

F_z [kN] as permanent loads at distance L, 2*L/3 and L/3; F_z [kN] as variable loads at distance L, 2*L/3 and L/3.

Friction coefficient μ_0 = 0,2 for friction in longitudinal direction. Max. deviation L/100.

Working loads in accordance with Eurocode 3

Joining Beam Bracket F 100 vertical

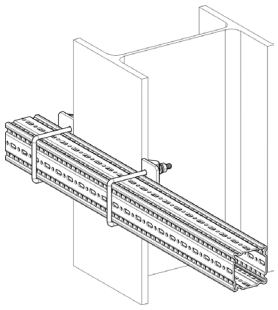

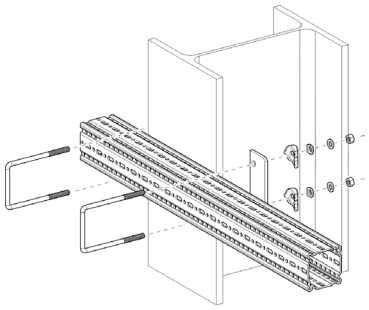

Part List
1 x Beam Section TP F 100
2 x U-Holder SB F 100-40

Distributed Load

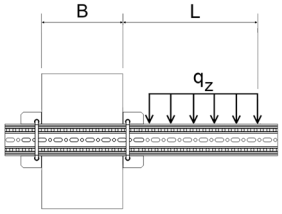

B	100		150		200		250		300	
L_{max}	$q_{z, perm}$	F_z (q_z * L)	$q_{z, perm}$	F_z (q_z * L)	$q_{z, perm}$	F_z (q_z * L)	$q_{z, perm}$	F_z (q_z * L)	$q_{z, perm}$	F_z (q_z * L)
[mm]	[kN/m]	[kN]	[kN/m]	[kN]	[kN/m]	[kN]	[kN/m]	[kN]	[kN/m]	[kN]
300	**3,21**	**0,96**	**4,46**	**1,34**	**5,34**	**1,60**	**5,99**	**1,80**	**6,49**	**1,95**
500	**1,36**	**0,68**	**1,98**	**0,99**	**2,47**	**1,23**	**2,86**	**1,43**	**3,17**	**1,58**
700	**0,75**	**0,52**	**1,13**	**0,79**	**1,44**	**1,00**	**1,69**	**1,18**	**1,91**	**1,34**
900	**0,47**	**0,43**	**0,73**	**0,65**	**0,94**	**0,85**	**1,12**	**1,01**	**1,28**	**1,15**
1100	**0,33**	**0,36**	**0,51**	**0,56**	**0,67**	**0,73**	**0,80**	**0,88**	**0,92**	**1,02**

q_z [kN/m] as permanent load over L.

Point Load

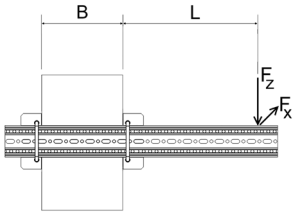

B	100		150		200		250		300	
	$F_{z, perm}$ for		$F_{z, perm}$ for		$F_{z, perm}$ for		$F_{z, perm}$ for		$F_{z, perm}$ for	
L_{max}	$F_x = 0$	$F_x = \mu_0 * F_z$	$F_x = 0$	$F_x = \mu_0 * F_z$	$F_x = 0$	$F_x = \mu_0 * F_z$	$F_x = 0$	$F_x = \mu_0 * F_z$	$F_x = 0$	$F_x = \mu_0 * F_z$
[mm]	[kN]	[kN]	[kN]	[kN]	[kN]	[kN]	[kN]	[kN]	[kN]	[kN]
300	**0,59**	**0,56**	**0,88**	**0,84**	**1,11**	**1,06**	**1,29**	**1,24**	**1,45**	**1,39**
500	**0,39**	**0,37**	**0,60**	**0,58**	**0,79**	**0,75**	**0,94**	**0,90**	**1,08**	**1,03**
700	**0,29**	**0,28**	**0,46**	**0,44**	**0,61**	**0,58**	**0,74**	**0,71**	**0,86**	**0,83**
900	**0,23**	**0,22**	**0,37**	**0,35**	**0,50**	**0,48**	**0,61**	**0,59**	**0,72**	**0,69**
1100	**0,19**	**0,18**	**0,31**	**0,30**	**0,42**	**0,40**	**0,52**	**0,50**	**0,61**	**0,59**

F_z [kN] as a permanent load at distance L; F_x [kN] as a variable load at distance L.

2 Point Loads

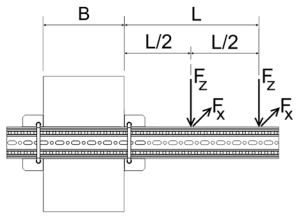

B	100		150		200		250		300	
	$F_{z, perm}$ for		$F_{z, perm}$ for		$F_{z, perm}$ for		$F_{z, perm}$ for		$F_{z, perm}$ for	
L_{max}	$F_x = 0$	$F_x = \mu_0 * F_z$	$F_x = 0$	$F_x = \mu_0 * F_z$	$F_x = 0$	$F_x = \mu_0 * F_z$	$F_x = 0$	$F_x = \mu_0 * F_z$	$F_x = 0$	$F_x = \mu_0 * F_z$
[mm]	[kN]	[kN]	[kN]	[kN]	[kN]	[kN]	[kN]	[kN]	[kN]	[kN]
300	**0,37**	**0,35**	**0,53**	**0,51**	**0,65**	**0,63**	**0,75**	**0,72**	**0,83**	**0,80**
500	**0,25**	**0,24**	**0,37**	**0,36**	**0,48**	**0,46**	**0,57**	**0,54**	**0,64**	**0,62**
700	**0,19**	**0,18**	**0,29**	**0,28**	**0,38**	**0,36**	**0,46**	**0,44**	**0,52**	**0,50**
900	**0,15**	**0,14**	**0,24**	**0,23**	**0,31**	**0,30**	**0,38**	**0,36**	**0,44**	**0,42**
1100	**0,13**	**0,12**	**0,20**	**0,19**	**0,27**	**0,26**	**0,33**	**0,31**	**0,38**	**0,37**

F_z [kN] as permanent loads at distance L and L/2; F_x [kN] as variable loads at distance L and L/2.

3 Point Loads

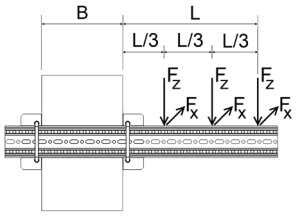

B	100		150		200		250		300	
	$F_{z, perm}$ for		$F_{z, perm}$ for		$F_{z, perm}$ for		$F_{z, perm}$ for		$F_{z, perm}$ for	
L_{max}	$F_x = 0$	$F_x = \mu_0 * F_z$	$F_x = 0$	$F_x = \mu_0 * F_z$	$F_x = 0$	$F_x = \mu_0 * F_z$	$F_x = 0$	$F_x = \mu_0 * F_z$	$F_x = 0$	$F_x = \mu_0 * F_z$
[mm]	[kN]	[kN]	[kN]	[kN]	[kN]	[kN]	[kN]	[kN]	[kN]	[kN]
300	**0,27**	**0,25**	**0,38**	**0,36**	**0,46**	**0,45**	**0,53**	**0,51**	**0,58**	**0,56**
500	**0,18**	**0,17**	**0,27**	**0,26**	**0,35**	**0,33**	**0,41**	**0,39**	**0,46**	**0,44**
700	**0,14**	**0,13**	**0,21**	**0,20**	**0,28**	**0,26**	**0,33**	**0,32**	**0,38**	**0,36**
900	**0,11**	**0,11**	**0,17**	**0,17**	**0,23**	**0,22**	**0,28**	**0,27**	**0,32**	**0,31**
1100	**0,09**	**0,09**	**0,15**	**0,14**	**0,20**	**0,19**	**0,24**	**0,23**	**0,28**	**0,27**

F_z [kN] as permanent loads at distance L, 2*L/3 and L/3; F_z [kN] as variable loads at distance L, 2*L/3 and L/3.

Friction coefficient μ_0 = 0,2 for friction in longitudinal direction. Max. deviation L/100.

Working loads in accordance with Eurocode 3

Beam Bracket F 100 - Variante a) clamped

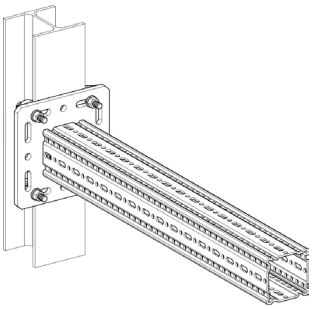

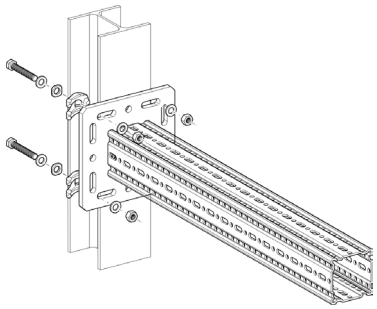

Part List
1 x Beam Bracket TKO F 100
1 x Assembly Set MS 5P M12 S

Distributed Load

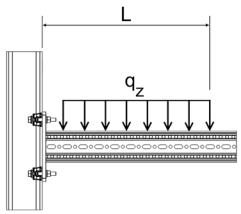

L_{max}	$q_{z, perm}$	F_z ($q_{z, perm}$ * L)
[mm]	[kN/m]	[kN]
300	**54,99**	**16,50**
500	**28,59**	**14,30**
700	**14,59**	**10,21**
900	**8,83**	**7,94**
1100	**5,91**	**6,50**

q_z [kN/m] as permanent load over L.

Point Load

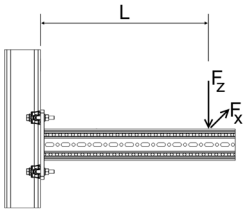

L_{max}	$F_{z, perm}$ for $F_x = 0$	$F_{z, perm}$ for $F_x = \mu_0 * F_z$
[mm]	[kN]	[kN]
300	**11,91**	**7,40**
500	**7,15**	**4,44**
700	**5,11**	**3,17**
900	**3,97**	**2,47**
1100	**3,25**	**2,02**

F_z [kN] as a permanent load at distance L; F_x [kN] as a variable load at distance L.

2 Point Loads

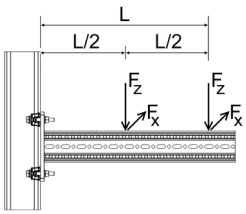

L_{max}	$F_{z, perm}$ for $F_x = 0$	$F_{z, perm}$ for $F_x = \mu_0 * F_z$
[mm]	[kN]	[kN]
300	**7,94**	**4,93**
500	**4,77**	**2,96**
700	**3,40**	**2,11**
900	**2,65**	**1,64**
1100	**2,17**	**1,34**

F_z [kN] as permanent loads at distance L and L/2; F_x [kN] as variable loads at distance L and L/2.

3 Point Loads

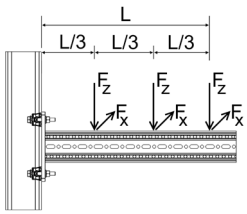

L_{max}	$F_{z, perm}$ for $F_x = 0$	$F_{z, perm}$ for $F_x = \mu_0 * F_z$
[mm]	[kN/m]	[kN]
300	**5,96**	**3,70**
500	**3,57**	**2,22**
700	**2,55**	**1,58**
900	**1,99**	**1,23**
1100	**1,62**	**1,01**

F_z [kN] as permanent loads at distance L, 2*L/3 and L/3; F_x [kN] as variable loads at distance L, 2*L/3 and L/3.

Friction coefficient μ_0 = 0,2 for friction in longitudinal direction. Max. deviation L/100.

Working loads in accordance with Eurocode 3

Beam Bracket F 100 - Variante b) anchored

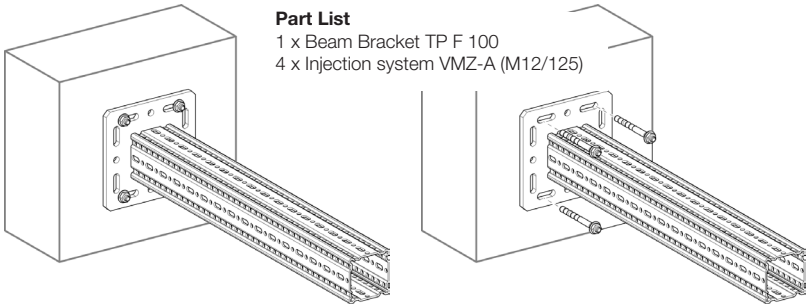

Part List
1 x Beam Bracket TP F 100
4 x Injection system VMZ-A (M12/125)

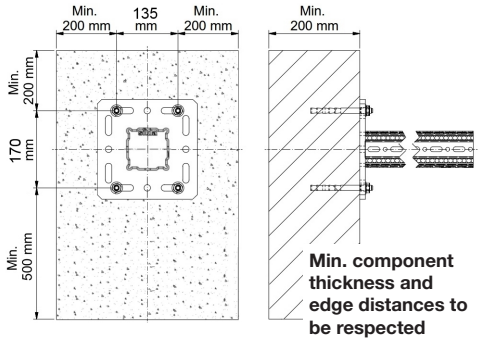

Min. component thickness and edge distances to be respected

Distributed Load

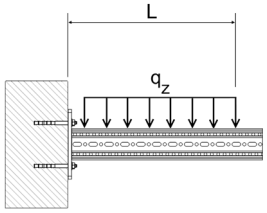

L_{max}	$q_{z, perm}$	F_z ($q_{z, perm}$ * L)
[mm]	[kN/m]	[kN]
300	**42,31**	**12,69**
500	**21,76**	**10,88**
700	**13,61**	**9,52**
900	**9,41**	**8,47**
1100	**6,93**	**7,62**

q_z [kN/m] as permanent load over L.

Point Load

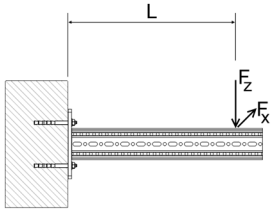

	$F_{z, perm}$ for	
L_{max}	$F_x = 0$	$F_x = \mu_0 * F_z$
[mm]	[kN]	[kN]
300	**10,16**	**10,16**
500	**8,02**	**8,02**
700	**6,63**	**6,63**
900	**5,33**	**5,33**
1100	**4,35**	**4,35**

F_z [kN] as a permanent load at distance L; F_x [kN] as a variable load at distance L.

2 Point Loads

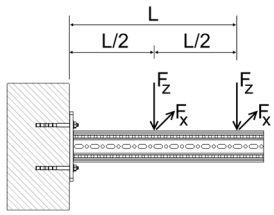

	$F_{z, perm}$ for	
L_{max}	$F_x = 0$	$F_x = \mu_0 * F_z$
[mm]	[kN]	[kN]
300	**5,64**	**5,64**
500	**4,62**	**4,62**
700	**3,91**	**3,91**
900	**3,39**	**3,39**
1100	**2,90**	**2,90**

F_z [kN] as permanent loads at distance L and L/2; F_x [kN] as variable loads at distance L and L/2.

3 Point Loads

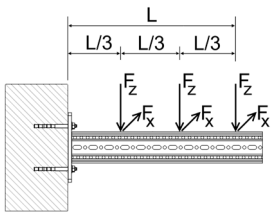

	$F_{z, perm}$ for	
L_{max}	$F_x = 0$	$F_x = \mu_0 * F_z$
[mm]	[kN/m]	[kN]
300	**3,91**	**3,91**
500	**3,24**	**3,24**
700	**2,77**	**2,77**
900	**2,42**	**2,42**
1100	**2,15**	**2,15**

F_z [kN] as permanent loads at distance L, 2*L/3 and L/3; F_x [kN] as variable loads at distance L, 2*L/3 and L/3.

Friction coefficient μ_0 = 0,2 for friction in longitudinal direction. Max. deviation L/100.

Working loads in accordance with Eurocode 3

Beam Section TP F 100/160

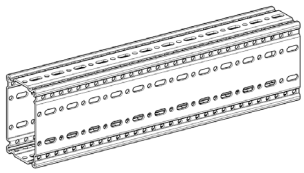

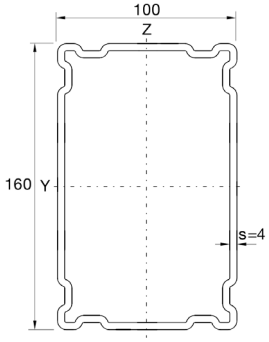

Single-span beam with uniaxial load
dead weight of the profile is considered

Distributed Load

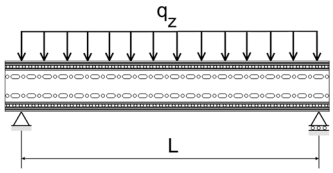

L_{max}	$q_{z, perm}$	F_z (q_z * L)
[mm]	[kN/m]	[kN]
1000	**112,43**	**112,43**
2000	**35,94**	**71,89**
3000	**15,88**	**47,65**
4000	**7,05**	**28,19**
5000	**3,61**	**18,04**
6000	**2,09**	**12,53**

q_z [kN/m] as permanent load over L.

Point Load

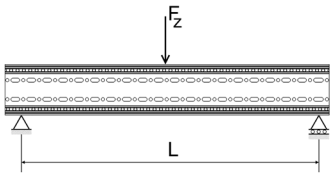

L_{max}	$F_{z, perm}$
[mm]	[N]
1000	**72,13**
2000	**35,94**
3000	**23,82**
4000	**17,62**
5000	**11,28**
6000	**7,83**

F_z [kN] as a permanent load at L/2.

2 Point Loads

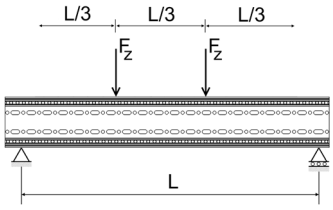

L_{max}	$F_{z, perm}$
[mm]	[N]
1000	**54,10**
2000	**26,96**
3000	**17,87**
4000	**10,34**
5000	**6,62**
6000	**4,60**

F_z [kN] as permanent loads at L/3 and 2*L/3.

3 Point Loads

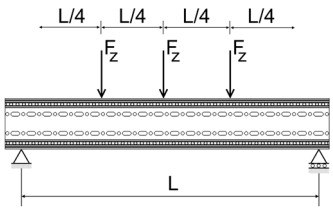

L_{max}	$F_{z, perm}$
[mm]	[N]
1000	**36,07**
2000	**17,97**
3000	**11,91**
4000	**7,42**
5000	**4,75**
6000	**3,30**

F_z [kN] as permanent loads at L/4, L/2 and 3*L/4.

Max. bending L/200.

Working loads in accordance with Eurocode 3

L-Construction F 100/160

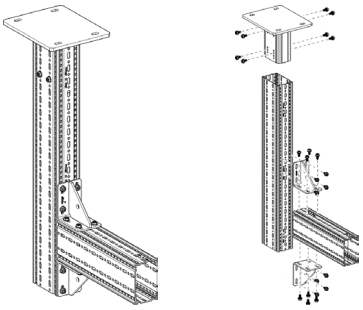

Part List
1 x End Support WBD F 100/160
2 x Beam Section TP F 100/160
2 x Corner Bracket WD F 100 140/140
24 x Self-Forming-Screw FLS F

Distributed Load

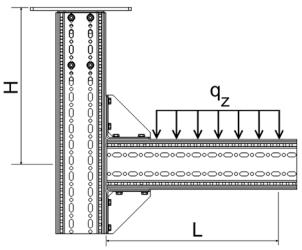

H_{max} \ L_{max}	300		500		700		900		1100	
	$q_{z, perm}$	F_z (q_z * L)	$q_{z, perm}$	F_z (q_z * L)	$q_{z, perm}$	F_z (q_z * L)	$q_{z, perm}$	F_z (q_z * L)	$q_{z, perm}$	F_z (q_z * L)
[mm]	[kN/m]	[kN]	[kN/m]	[kN]	[kN/m]	[kN]	[kN/m]	[kN]	[kN/m]	[kN]
2000	**23,30**	**6,99**	**9,91**	**4,96**	**5,40**	**3,78**	**3,36**	**3,02**	**2,27**	**2,49**
2500	**21,42**	**6,43**	**9,15**	**4,58**	**4,99**	**3,49**	**3,11**	**2,79**	**2,10**	**2,31**
3000	**19,82**	**5,94**	**8,50**	**4,25**	**4,64**	**3,25**	**2,89**	**2,60**	**1,95**	**2,14**
3500	**18,43**	**5,53**	**7,93**	**3,96**	**4,33**	**3,03**	**2,70**	**2,43**	**1,82**	**2,00**

q_z [kN/m] as permanent load over L.

Point Load

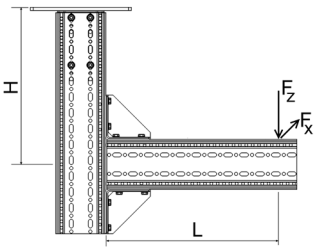

H_{max} \ L_{max}	300		500		700		900		1100	
	$F_{z, perm}$ for		$F_{z, perm}$ for		$F_{z, perm}$ for		$F_{z, perm}$ for		$F_{z, perm}$ for	
	$F_x = 0$	$F_x = \mu_0 * F_z$	$F_x = 0$	$F_x = \mu_0 * F_z$	$F_x = 0$	$F_x = \mu_0 * F_z$	$F_x = 0$	$F_x = \mu_0 * F_z$	$F_x = 0$	$F_x = \mu_0 * F_z$
[mm]	[kN]	[kN]	[kN]	[kN]	[kN]	[kN]	[kN]	[kN]	[kN]	[kN]
2000	**4,04**	**3,10**	**2,71**	**2,71**	**2,01**	**2,01**	**1,58**	**1,58**	**1,29**	**1,29**
2500	**3,72**	**2,63**	**2,51**	**2,38**	**1,87**	**1,87**	**1,47**	**1,47**	**1,20**	**1,20**
3000	**3,46**	**2,28**	**2,34**	**2,09**	**1,74**	**1,74**	**1,37**	**1,37**	**1,12**	**1,12**
3500	**3,23**	**2,02**	**2,19**	**1,87**	**1,63**	**1,63**	**1,28**	**1,28**	**1,04**	**1,04**

F_z [kN] as a permanent load at distance L; F_x [kN] as a variable load at distance L.

2 Point Loads

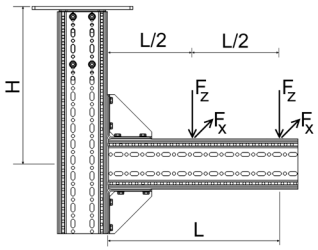

H_{max} \ L_{max}	300		500		700		900		1100	
	$F_{z, perm}$ for		$F_{z, perm}$ for		$F_{z, perm}$ for		$F_{z, perm}$ for		$F_{z, perm}$ for	
	$F_x = 0$	$F_x = \mu_0 * F_z$	$F_x = 0$	$F_x = \mu_0 * F_z$	$F_x = 0$	$F_x = \mu_0 * F_z$	$F_x = 0$	$F_x = \mu_0 * F_z$	$F_x = 0$	$F_x = \mu_0 * F_z$
[mm]	[kN]	[kN]	[kN]	[kN]	[kN]	[kN]	[kN]	[kN]	[kN]	[kN]
2000	**2,56**	**1,62**	**1,76**	**1,48**	**1,32**	**1,32**	**1,04**	**1,04**	**0,85**	**0,85**
2500	**2,36**	**1,37**	**1,62**	**1,26**	**1,22**	**1,170**	**0,96**	**0,96**	**0,79**	**0,79**
3000	**2,19**	**1,18**	**1,51**	**1,10**	**1,13**	**1,03**	**0,90**	**0,90**	**0,73**	**0,73**
3500	**2,04**	**1,04**	**1,41**	**0,98**	**1,06**	**0,92**	**0,84**	**0,84**	**0,69**	**0,69**

F_z [kN] as permanent loads at distance L and L/2; F_x [kN] as variable loads at distance L and L/2.

3 Point Loads

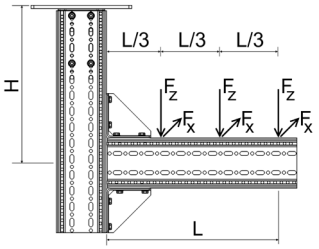

H_{max} \ L_{max}	300		500		700		900		1100	
	$F_{z, perm}$ for		$F_{z, perm}$ for		$F_{z, perm}$ for		$F_{z, perm}$ for		$F_{z, perm}$ for	
	$F_x = 0$	$F_x = \mu_0 * F_z$	$F_x = 0$	$F_x = \mu_0 * F_z$	$F_x = 0$	$F_x = \mu_0 * F_z$	$F_x = 0$	$F_x = \mu_0 * F_z$	$F_x = 0$	$F_x = \mu_0 * F_z$
[mm]	[kN]	[kN]	[kN]	[kN]	[kN]	[kN]	[kN]	[kN]	[kN]	[kN]
2000	**1,86**	**1,10**	**1,28**	**1,01**	**0,96**	**0,93**	**0,76**	**0,76**	**0,63**	**0,63**
2500	**1,71**	**0,92**	**1,18**	**0,86**	**0,89**	**0,80**	**0,71**	**0,71**	**0,58**	**0,58**
3000	**1,59**	**0,80**	**1,10**	**0,75**	**0,83**	**0,70**	**0,66**	**0,66**	**0,54**	**0,54**
3500	**1,48**	**0,70**	**1,03**	**0,66**	**0,78**	**0,63**	**0,62**	**0,59**	**0,51**	**0,51**

F_z [kN] as permanent loads at distance L, 2*L/3 and L/3; F_x [kN] as variable loads at distance L, 2*L/3 and L/3.

For assembly with STA F 100 - 100/160 the loads have to be reduced by 10 % reduction ratio F_z.

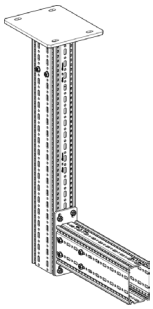

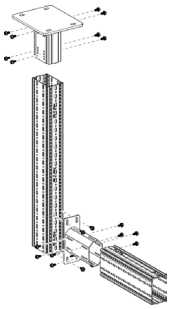

Part List
1 x End Support WBD F 100/160
2 x Beam Section TP F 100/160
1 x End Support STA F 100 - 100/160
20 x Self-Forming-Screw FLS F

All illustrated structures are able to be installed standing as well.
Friction coefficient $\mu_0 = 0{,}2$ for friction in longitudinal direction. Max. deviation H/100; L/100.

Working loads in accordance with Eurocode 3

T-Support F 100/160

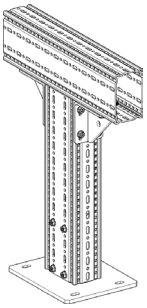

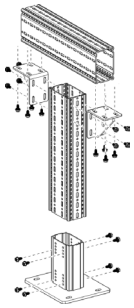

Part List
1 x End Support WBD F 100/160
2 x Beam Section TP F 100/160
2 x Corner Bracket WD F 100
24 x Self-Forming-Screw FLS F

Distributed Load - symmetrical

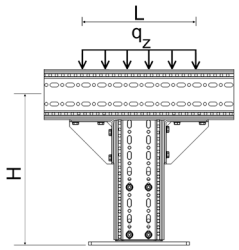

H_{max}	$q_{z, perm}$	F_z ($q_{z, perm}$ * 1m)
[mm]	[kN/m]	[kN]
2000	**15,89**	**15,89**
2500	**15,81**	**15,81**
3000	**15,73**	**15,73**
3500	**15,65**	**15,65**

q_z [kN/m] as permanent load over L; L_{max} = 1.100 mm.

Point Load - centrical

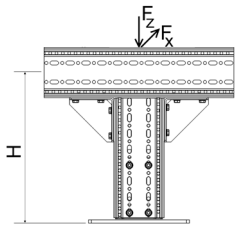

H_{max}	$F_{z, perm}$ for $F_x = 0$	$F_{z, perm}$ for $F_x = \mu_0 * F_z$
[mm]	[kN]	[kN]
2000	**15,27**	**3,35**
2500	**15,19**	**2,52**
3000	**15,11**	**1,98**
3500	**15,04**	**1,61**

F_z [kN] as a permanent load; F_x [kN] as a variable load;
Central load introduction for planned eccentricity ± 50 mm.

2 Point Loads - symmetrical

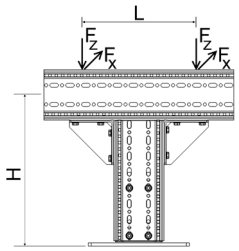

H_{max}	$F_{z, perm}$ for $F_x = 0$	$F_{z, perm}$ for $F_x = \mu_0 * F_z$
[mm]	[kN]	[kN]
2000	**7,93**	**1,75**
2500	**7,89**	**1,30**
3000	**7,85**	**1,02**
3500	**7,81**	**0,82**

F_z [kN] as permanent loads; F_x [kN] as variable loads; L_{max} = 1.100 mm.

3 Point Loads - symmetrical

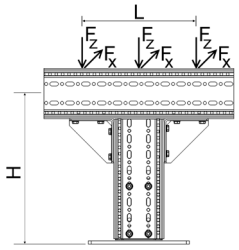

H_{max}	$F_{z, perm}$ for $F_x = 0$	$F_{z, perm}$ for $F_x = \mu_0 * F_z$
[mm]	[kN/m]	[kN]
2000	**5,29**	**1,17**
2500	**5,26**	**0,87**
3000	**5,23**	**0,68**
3500	**5,21**	**0,55**

F_z [kN] as permanent loads; F_x [kN] as variable loads; L_{max} = 1.100 mm.

Friction coefficient μ_0 = 0,2 for friction in longitudinal direction. Max. deviation H/150.

Working loads in accordance with Eurocode 3

Frame F 100/160

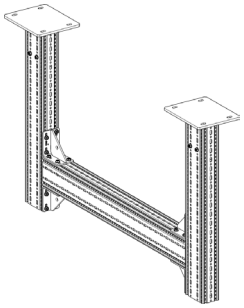

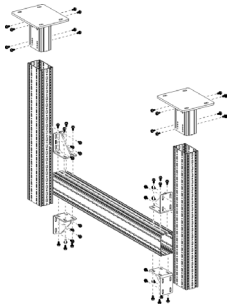

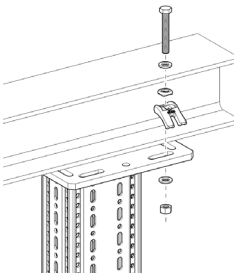

Part List
2 x End Support WBD F 100/160
3 x Beam Section TP F 100/160
4 x Corner Bracket WD F 100
48 x Self-Forming-Screw FLS F

Distributed Load

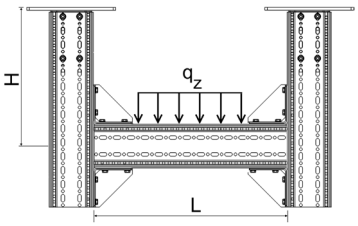

L_{max} / H_{max}	1500		2000		2500		3000		3500		4000	
	$q_{z, perm}$	F_z (q_z * L)	$q_{z, perm}$	F_z (q_z * L)	$q_{z, perm}$	F_z (q_z * L)	$q_{z, perm}$	F_z (q_z * L)	$q_{z, perm}$	F_z (q_z * L)	$q_{z, perm}$	F_z (q_z * L)
[mm]	[kN/m]	[kN]	[kN/m]	[kN]	[kN/m]	[kN]	[kN/m]	[kN]	[kN/m]	[kN]	[kN/m]	[kN]
2000	**26,71**	**32,58**	**18,80**	**32,34**	**14,45**	**32,07**	**11,69**	**31,79**	**9,78**	**31,50**	**8,26**	**30,72**
2500	**26,49**	**32,31**	**18,63**	**32,04**	**14,30**	**31,74**	**11,55**	**31,42**	**9,65**	**31,09**	**8,26**	**30,74**
3000	**26,29**	**32,07**	**18,48**	**31,78**	**14,17**	**31,45**	**11,43**	**31,10**	**9,55**	**30,74**	**8,16**	**30,36**
3500	**26,11**	**31,85**	**18,34**	**31,54**	**14,05**	**31,19**	**11,33**	**30,82**	**9,45**	**30,43**	**8,07**	**30,03**
4000	**25,94**	**31,64**	**18,21**	**31,32**	**13,95**	**30,96**	**11,24**	**30,58**	**9,37**	**30,18**	**7,93**	**29,51**

q_z [kN/m] as permanent load over L.

Point Load

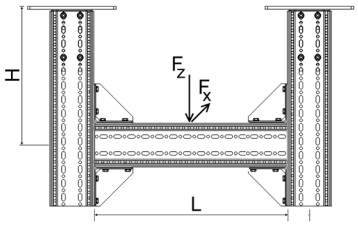

L_{max} / H_{max}	1500		2000		2500		3000		3500		4000	
	$F_{z, perm}$ for		$F_{z, perm}$ for		$F_{z, perm}$ for		$F_{z, perm}$ for		$F_{z, perm}$ for		$F_{z, perm}$ for	
	$F_x = 0$	$F_x = \mu_0 * F_z$	$F_x = 0$	$F_x = \mu_0 * F_z$	$F_x = 0$	$F_x = \mu_0 * F_z$	$F_x = 0$	$F_x = \mu_0 * F_z$	$F_x = 0$	$F_x = \mu_0 * F_z$	$F_x = 0$	$F_x = \mu_0 * F_z$
[mm]	[kN]	[kN]	[kN]	[kN]	[kN]	[kN]	[kN]	[kN]	[kN]	[kN]	[kN]	[kN]
2000	**32,52**	**7,96**	**32,21**	**7,93**	**31,76**	**7,88**	**27,97**	**7,83**	**24,47**	**7,78**	**21,81**	**7,57**
2500	**32,23**	**6,47**	**31,89**	**6,44**	**31,51**	**6,40**	**27,81**	**6,36**	**24,33**	**6,32**	**21,67**	**6,22**
3000	**31,97**	**5,44**	**31,61**	**5,42**	**31,17**	**5,39**	**27,65**	**5,37**	**24,18**	**5,30**	**21,54**	**5,17**
3500	**31,75**	**4,60**	**31,36**	**4,58**	**30,89**	**4,54**	**27,49**	**4,49**	**24,04**	**4,43**	**21,42**	**4,35**
4000	**31,52**	**3,87**	**31,11**	**3,85**	**30,64**	**3,83**	**27,33**	**3,80**	**23,90**	**3,76**	**21,29**	**3,69**

F_z [kN] as a permanent load at distance L/2; F_x [kN] as a variable load at distance L/2.

2 Point Loads

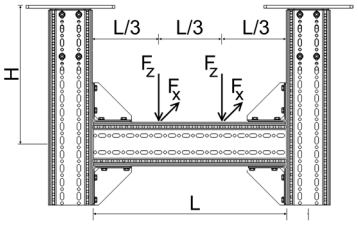

L_{max} / H_{max}	1500		2000		2500		3000		3500		4000	
	$F_{z, perm}$ for		$F_{z, perm}$ for		$F_{z, perm}$ for		$F_{z, perm}$ for		$F_{z, perm}$ for		$F_{z, perm}$ for	
	$F_x = 0$	$F_x = \mu_0 * F_z$	$F_x = 0$	$F_x = \mu_0 * F_z$	$F_x = 0$	$F_x = \mu_0 * F_z$	$F_x = 0$	$F_x = \mu_0 * F_z$	$F_x = 0$	$F_x = \mu_0 * F_z$	$F_x = 0$	$F_x = \mu_0 * F_z$
[mm]	[kN]	[kN]	[kN]	[kN]	[kN]	[kN]	[kN]	[kN]	[kN]	[kN]	[kN]	[kN]
2000	**16,27**	**3,98**	**16,13**	**3,97**	**15,98**	**3,95**	**15,81**	**3,93**	**15,38**	**3,90**	**13,71**	**3,88**
2500	**16,14**	**3,23**	**15,98**	**3,22**	**15,80**	**3,21**	**15,61**	**3,19**	**15,41**	**3,17**	**13,49**	**3,15**
3000	**16,01**	**2,72**	**15,84**	**2,71**	**15,65**	**2,70**	**15,44**	**2,69**	**15,22**	**2,67**	**13,29**	**2,61**
3500	**15,90**	**2,30**	**15,72**	**2,29**	**15,51**	**2,28**	**15,29**	**2,26**	**15,06**	**2,23**	**13,10**	**2,19**
4000	**15,79**	**1,93**	**15,60**	**1,93**	**15,39**	**1,92**	**15,16**	**1,91**	**14,91**	**1,89**	**12,92**	**1,87**

F_z [kN] as permanent loads at distance 2*L/3 and L/3; F_x [kN] as variable loads at distance 2*L/3 and L/3.

3 Point Loads

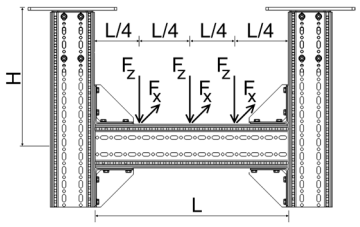

L_{max} / H_{max}	1500		2000		2500		3000		3500		4000	
	$F_{z,\,perm}$ for		$F_{z,\,perm}$ for		$F_{z,\,perm}$ for		$F_{z,\,perm}$ for		$F_{z,\,perm}$ for		$F_{z,\,perm}$ for	
	$F_x = 0$	$F_x = \mu_0 * F_z$	$F_x = 0$	$F_x = \mu_0 * F_z$	$F_x = 0$	$F_x = \mu_0 * F_z$	$F_x = 0$	$F_x = \mu_0 * F_z$	$F_x = 0$	$F_x = \mu_0 * F_z$	$F_x = 0$	$F_x = \mu_0 * F_z$
[mm]	[kN]	[kN]	[kN]	[kN]	[kN]	[kN]	[kN]	[kN]	[kN]	[kN]	[kN]	[kN]
2000	**10,85**	**2,66**	**10,76**	**2,64**	**10,66**	**2,63**	**10,53**	**2,62**	**10,44**	**2,61**	**9,52**	**2,59**
2500	**10,76**	**2,16**	**10,66**	**2,15**	**10,55**	**2,14**	**10,43**	**2,13**	**10,30**	**2,12**	**9,64**	**2,10**
3000	**10,68**	**1,82**	**10,57**	**1,81**	**10,45**	**1,80**	**10,32**	**1,79**	**10,18**	**1,78**	**9,49**	**1,75**
3500	**10,61**	**1,53**	**10,49**	**1,53**	**10,36**	**1,52**	**10,22**	**1,51**	**10,07**	**1,49**	**9,35**	**1,47**
4000	**10,54**	**1,29**	**10,41**	**1,29**	**10,28**	**1,28**	**10,13**	**1,27**	**9,97**	**1,26**	**9,22**	**1,25**

F_z [kN] as permanent loads at distance 3*L/4, L/2 and L/4; F_x [kN] as variable loads at distance 3*L/4, L/2 and L/4.

For assembly with STA F 100 - 100/160 F_z has to be reduced by the reduction ratio F_a.

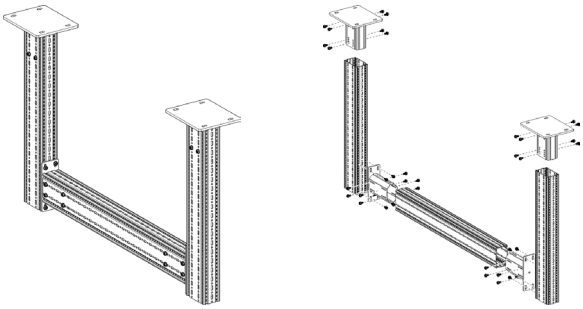

Part List
2 x End Support WBD F 100/160
3 x Beam Section TP F 100/160
2 x End Support STA F 100 - 100/160
24 x Self-Forming-Screw FLS F

	Reduction ratio F_a [%]	
	$F_{z,\,perm}$ for	
L (mm)	$F_x = 0$	$F_x = 0{,}2 * F_z$
2000	**-30%**	**0%**
2500	**-38%**	**0%**
3000	**-45%**	**0%**
3500	**-53%**	**0%**
4000	**-60%**	**0%**

All illustrated structures are able to be installed standing as well.
Friction coefficient $\mu_0 = 0{,}2$ for friction in longitudinal direction. Max. deviation H/100; L/200.

Working loads in accordance with Eurocode 3

Joining Beam Bracket F 100/160 horizontal

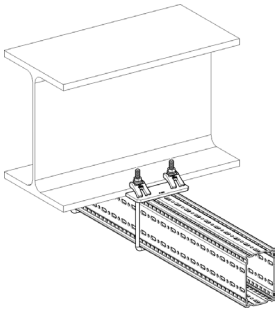

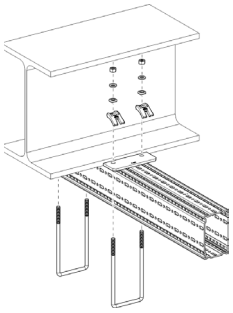

Part List
1 x Beam Section TP F 100/160
2 x U-Holder SB F 100/160-40

Distributed Load

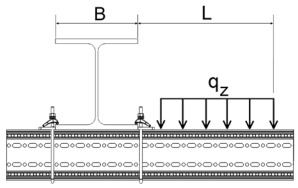

B	100		150		200		250		300	
L_{max}	$q_{z, perm}$	F_z (q_z * L)	$q_{z, perm}$	F_z (q_z * L)	$q_{z, perm}$	F_z (q_z * L)	$q_{z, perm}$	F_z (q_z * L)	$q_{z, perm}$	F_z (q_z * L)
[mm]	[kN/m]	[kN]	[kN/m]	[kN]	[kN/m]	[kN]	[kN/m]	[kN]	[kN/m]	[kN]
300	**14,39**	**4,32**	**20,42**	**6,13**	**24,82**	**7,45**	**28,17**	**8,45**	**30,81**	**9,24**
500	**5,64**	**2,82**	**8,38**	**4,19**	**10,53**	**5,26**	**12,27**	**6,13**	**13,70**	**6,85**
700	**3,02**	**2,12**	**4,62**	**3,23**	**5,93**	**4,15**	**7,03**	**4,92**	**7,96**	**5,58**
900	**1,88**	**1,69**	**2,93**	**2,64**	**3,82**	**3,44**	**4,59**	**4,13**	**5,26**	**4,73**
1100	**1,28**	**1,41**	**2,02**	**2,22**	**2,67**	**2,94**	**3,24**	**3,56**	**3,74**	**4,12**

q_z [kN/m] as permanent load over L.

Point Load

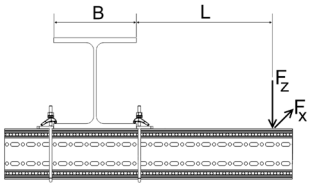

B	100		150		200		250		300	
	$F_{z, perm}$ for		$F_{z, perm}$ for		$F_{z, perm}$ for		$F_{z, perm}$ for		$F_{z, perm}$ for	
L_{max}	$F_x = 0$	$F_x = \mu_0 * F_z$	$F_x = 0$	$F_x = \mu_0 * F_z$	$F_x = 0$	$F_x = \mu_0 * F_z$	$F_x = 0$	$F_x = \mu_0 * F_z$	$F_x = 0$	$F_x = \mu_0 * F_z$
[mm]	[kN]	[kN]	[kN]	[kN]	[kN]	[kN]	[kN]	[kN]	[kN]	[kN]
300	**2,36**	**1,12**	**3,51**	**1,67**	**4,43**	**2,10**	**5,17**	**2,45**	**5,79**	**2,75**
500	**1,55**	**0,74**	**2,41**	**1,14**	**3,14**	**1,49**	**3,77**	**1,79**	**4,32**	**2,05**
700	**1,16**	**0,55**	**1,83**	**0,87**	**2,43**	**1,15**	**2,96**	**1,41**	**3,44**	**1,63**
900	**0,92**	**0,44**	**1,48**	**0,70**	**1,98**	**0,94**	**2,44**	**1,16**	**2,86**	**1,36**
1100	**0,77**	**0,36**	**1,24**	**0,59**	**1,67**	**0,79**	**2,08**	**0,99**	**2,45**	**1,16**

F_z [kN] as a permanent load at distance L; F_x [kN] as a variable load at distance L.

2 Point Loads

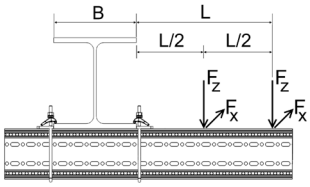

B	100		150		200		250		300	
	$F_{z, perm}$ for		$F_{z, perm}$ for		$F_{z, perm}$ for		$F_{z, perm}$ for		$F_{z, perm}$ for	
L_{max}	$F_x = 0$	$F_x = \mu_0 * F_z$	$F_x = 0$	$F_x = \mu_0 * F_z$	$F_x = 0$	$F_x = \mu_0 * F_z$	$F_x = 0$	$F_x = \mu_0 * F_z$	$F_x = 0$	$F_x = \mu_0 * F_z$
[mm]	[kN]	[kN]	[kN]	[kN]	[kN]	[kN]	[kN]	[kN]	[kN]	[kN]
300	**1,46**	**0,69**	**2,12**	**1,01**	**2,62**	**1,24**	**3,01**	**1,43**	**3,32**	**1,57**
500	**0,98**	**0,47**	**1,50**	**0,71**	**1,92**	**0,91**	**2,27**	**1,08**	**2,57**	**1,22**
700	**0,74**	**0,35**	**1,16**	**0,55**	**1,51**	**0,72**	**1,82**	**0,86**	**2,09**	**0,99**
900	**0,60**	**0,28**	**0,94**	**0,45**	**1,25**	**0,59**	**1,52**	**0,72**	**1,76**	**0,84**
1100	**0,50**	**0,24**	**0,79**	**0,38**	**1,06**	**0,50**	**1,30**	**0,62**	**1,53**	**0,72**

F_z [kN] as permanent loads at distance L and L/2; F_x [kN] as variable loads at distance L and L/2.

3 Point Loads

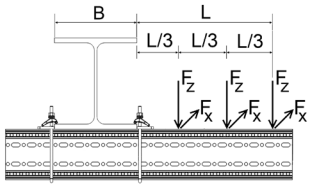

B	100		150		200		250		300	
	$F_{z, perm}$ for		$F_{z, perm}$ for		$F_{z, perm}$ for		$F_{z, perm}$ for		$F_{z, perm}$ for	
L_{max}	$F_x = 0$	$F_x = \mu_0 * F_z$	$F_x = 0$	$F_x = \mu_0 * F_z$	$F_x = 0$	$F_x = \mu_0 * F_z$	$F_x = 0$	$F_x = \mu_0 * F_z$	$F_x = 0$	$F_x = \mu_0 * F_z$
[mm]	[kN]	[kN]	[kN]	[kN]	[kN]	[kN]	[kN]	[kN]	[kN]	[kN]
300	**1,06**	**0,50**	**1,52**	**0,72**	**1,86**	**0,88**	**2,12**	**1,00**	**2,33**	**1,10**
500	**0,72**	**0,34**	**1,08**	**0,52**	**1,38**	**0,65**	**1,62**	**0,77**	**1,82**	**0,87**
700	**0,55**	**0,26**	**0,84**	**0,40**	**1,10**	**0,52**	**1,31**	**0,62**	**1,50**	**0,71**
900	**0,44**	**0,21**	**0,69**	**0,33**	**0,91**	**0,43**	**1,10**	**0,52**	**1,27**	**0,61**
1100	**0,37**	**0,18**	**0,58**	**0,28**	**0,78**	**0,37**	**0,95**	**0,45**	**1,11**	**0,53**

F_z [kN] as permanent loads at distance L, 2*L/3 and L/3; F_z [kN] as variable loads at distance L, 2*L/3 and L/3.

Friction coefficient μ_0 = 0,2 for friction in longitudinal direction. Max. deviation L/100.

Working loads in accordance with Eurocode 3

Joining Beam Bracket F 100/160 vertical

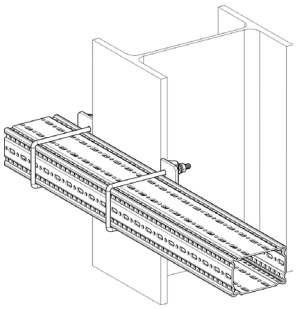

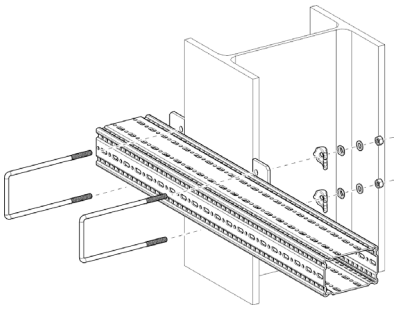

Part List
1 x Beam Section TP F 100/160
2 x U-Holder SB F 100/160-40

Distributed Load

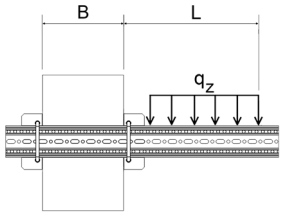

B	100		150		200		250		300	
L_{max}	$q_{z, perm}$	F_z (q_z * L)	$q_{z, perm}$	F_z (q_z * L)	$q_{z, perm}$	F_z (q_z * L)	$q_{z, perm}$	F_z (q_z * L)	$q_{z, perm}$	F_z (q_z * L)
[mm]	[kN/m]	[kN]	[kN/m]	[kN]	[kN/m]	[kN]	[kN/m]	[kN]	[kN/m]	[kN]
300	**3,21**	**0,96**	**4,46**	**1,34**	**5,34**	**1,60**	**5,99**	**1,80**	**6,49**	**1,95**
500	**1,36**	**0,68**	**1,98**	**0,99**	**2,47**	**1,23**	**2,86**	**1,43**	**3,17**	**1,58**
700	**0,75**	**0,52**	**1,13**	**0,79**	**1,44**	**1,00**	**1,69**	**1,18**	**1,91**	**1,34**
900	**0,47**	**0,43**	**0,73**	**0,65**	**0,94**	**0,85**	**1,12**	**1,01**	**1,28**	**1,15**
1100	**0,33**	**0,36**	**0,51**	**0,56**	**0,67**	**0,73**	**0,80**	**0,88**	**0,92**	**1,02**

q_z [kN/m] as permanent load over L.

Point Load

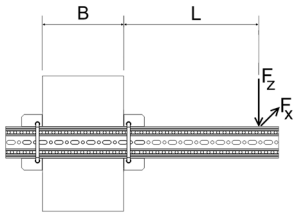

B	100		150		200		250		300	
	$F_{z, perm}$ for		$F_{z, perm}$ for		$F_{z, perm}$ for		$F_{z, perm}$ for		$F_{z, perm}$ for	
L_{max}	$F_x = 0$	$F_x = \mu_0 * F_z$	$F_x = 0$	$F_x = \mu_0 * F_z$	$F_x = 0$	$F_x = \mu_0 * F_z$	$F_x = 0$	$F_x = \mu_0 * F_z$	$F_x = 0$	$F_x = \mu_0 * F_z$
[mm]	[kN]	[kN]	[kN]	[kN]	[kN]	[kN]	[kN]	[kN]	[kN]	[kN]
300	**0,59**	**0,56**	**0,88**	**0,84**	**1,11**	**1,06**	**1,29**	**1,24**	**1,45**	**1,39**
500	**0,39**	**0,37**	**0,60**	**0,58**	**0,79**	**0,75**	**0,94**	**0,90**	**1,08**	**1,03**
700	**0,29**	**0,28**	**0,46**	**0,44**	**0,61**	**0,58**	**0,74**	**0,71**	**0,86**	**0,83**
900	**0,23**	**0,22**	**0,37**	**0,35**	**0,50**	**0,48**	**0,61**	**0,59**	**0,72**	**0,69**
1100	**0,19**	**0,18**	**0,31**	**0,30**	**0,42**	**0,40**	**0,52**	**0,50**	**0,61**	**0,59**

F_z [kN] as a permanent load at distance L; F_x [kN] as a variable load at distance L.

2 Point Loads

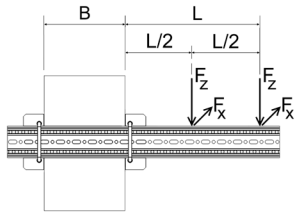

B	100		150		200		250		300	
	$F_{z, perm}$ for		$F_{z, perm}$ for		$F_{z, perm}$ for		$F_{z, perm}$ for		$F_{z, perm}$ for	
L_{max}	$F_x = 0$	$F_x = \mu_0 * F_z$	$F_x = 0$	$F_x = \mu_0 * F_z$	$F_x = 0$	$F_x = \mu_0 * F_z$	$F_x = 0$	$F_x = \mu_0 * F_z$	$F_x = 0$	$F_x = \mu_0 * F_z$
[mm]	[kN]	[kN]	[kN]	[kN]	[kN]	[kN]	[kN]	[kN]	[kN]	[kN]
300	**0,37**	**0,35**	**0,53**	**0,51**	**0,65**	**0,63**	**0,75**	**0,72**	**0,83**	**0,80**
500	**0,25**	**0,24**	**0,37**	**0,36**	**0,48**	**0,46**	**0,57**	**0,54**	**0,64**	**0,62**
700	**0,19**	**0,18**	**0,29**	**0,28**	**0,38**	**0,36**	**0,46**	**0,44**	**0,52**	**0,50**
900	**0,15**	**0,14**	**0,24**	**0,23**	**0,31**	**0,30**	**0,38**	**0,36**	**0,44**	**0,42**
1100	**0,13**	**0,12**	**0,20**	**0,19**	**0,27**	**0,26**	**0,33**	**0,31**	**0,38**	**0,37**

F_z [kN] as permanent loads at distance L and L/2; F_x [kN] as variable loads at distance L and L/2.

3 Point Loads

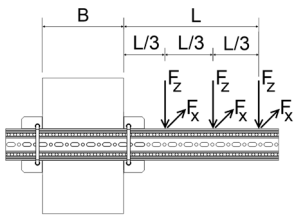

B	100		150		200		250		300	
	$F_{z, perm}$ for		$F_{z, perm}$ for		$F_{z, perm}$ for		$F_{z, perm}$ for		$F_{z, perm}$ for	
L_{max}	$F_x = 0$	$F_x = \mu_0 * F_z$	$F_x = 0$	$F_x = \mu_0 * F_z$	$F_x = 0$	$F_x = \mu_0 * F_z$	$F_x = 0$	$F_x = \mu_0 * F_z$	$F_x = 0$	$F_x = \mu_0 * F_z$
[mm]	[kN]	[kN]	[kN]	[kN]	[kN]	[kN]	[kN]	[kN]	[kN]	[kN]
300	**0,27**	**0,25**	**0,38**	**0,36**	**0,46**	**0,45**	**0,53**	**0,51**	**0,58**	**0,56**
500	**0,18**	**0,17**	**0,27**	**0,26**	**0,35**	**0,33**	**0,41**	**0,39**	**0,46**	**0,44**
700	**0,14**	**0,13**	**0,21**	**0,20**	**0,28**	**0,26**	**0,33**	**0,32**	**0,38**	**0,36**
900	**0,11**	**0,11**	**0,17**	**0,17**	**0,23**	**0,22**	**0,28**	**0,27**	**0,32**	**0,31**
1100	**0,09**	**0,09**	**0,15**	**0,14**	**0,20**	**0,19**	**0,24**	**0,23**	**0,28**	**0,27**

F_z [kN] as permanent loads at distance L, 2*L/3 and L/3; F_z [kN] as variable loads at distance L, 2*L/3 and L/3.

Friction coefficient μ_0 = 0,2 for friction in longitudinal direction; Max. deviation L/100.

Working loads in accordance with Eurocode 3

Beam Bracket F 100/160 - Variante a) clamped

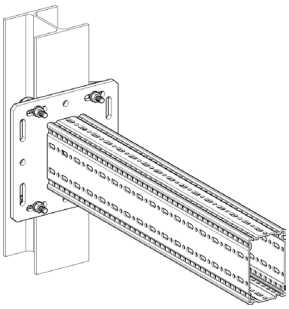

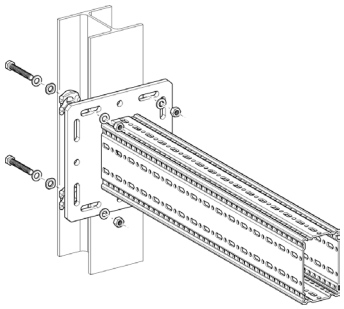

Part List
1 x Beam Bracket TKO F 100/160
1 x Assembly Set MS 5P M12 S

Distributed Load

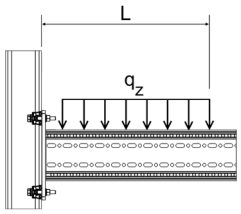

L_{max}	$q_{z, perm}$	F_z (q_z * L)
[mm]	[kN/m]	[kN]
300	**47,89**	**14,37**
500	**36,39**	**18,20**
700	**18,57**	**13,00**
900	**11,23**	**10,11**
1100	**7,52**	**8,27**

q_z [kN/m] as permanent load over L.

Point Load

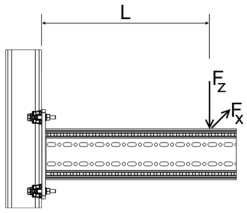

L_{max}	$F_{z, perm}$ for $F_x = 0$	$F_{z, perm}$ for $F_x = \mu_0 * F_z$
[mm]	[kN]	[kN]
300	**15,16**	**9,35**
500	**9,10**	**5,61**
700	**6,50**	**4,01**
900	**5,05**	**3,12**
1100	**4,14**	**2,55**

F_z [kN] as a permanent load at distance L; F_x [kN] as a variable load at distance L.

2 Point Loads

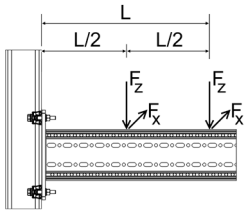

L_{max}	$F_{z, perm}$ for $F_x = 0$	$F_{z, perm}$ for $F_x = \mu_0 * F_z$
[mm]	[kN]	[kN]
300	**9,41**	**6,23**
500	**6,07**	**3,74**
700	**4,33**	**2,67**
900	**3,37**	**2,08**
1100	**2,76**	**1,70**

F_z [kN] as permanent loads at distance L and L/2; F_x [kN] as variable loads at distance L and L/2.

3 Point Loads

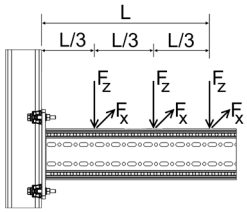

L_{max}	$F_{z, perm}$ for $F_x = 0$	$F_{z, perm}$ for $F_x = \mu_0 * F_z$
[mm]	[kN]	[kN]
300	**5,69**	**4,67**
500	**4,55**	**2,80**
700	**3,25**	**2,00**
900	**2,53**	**1,56**
1100	**2,07**	**1,27**

F_z [kN] as permanent loads at distance L, 2*L/3 and L/3; F_x [kN] as variable loads at distance L, 2*L/3 and L/3.

Friction coefficient μ_0 = 0,2 for friction in longitudinal direction; Max. deviation L/100.

Working loads in accordance with Eurocode 3

Beam Bracket F 100/160 - Variante b) anchored

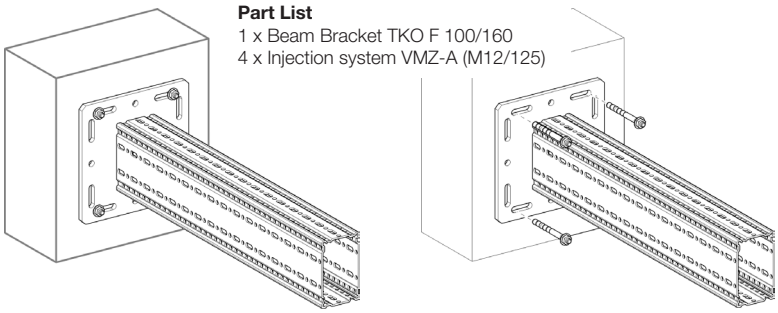

Part List
1 x Beam Bracket TKO F 100/160
4 x Injection system VMZ-A (M12/125)

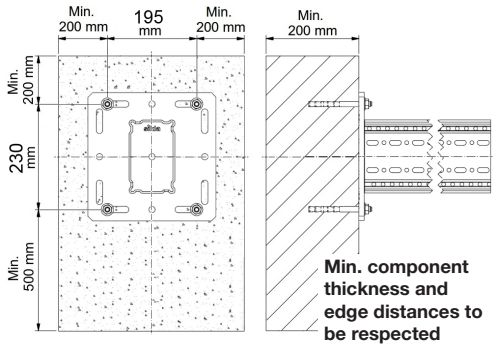

Distributed Load

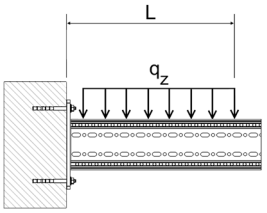

L_{max}	$q_{z, perm}$	F_z (q_z * L)
[mm]	[kN/m]	[kN]
300	**49,07**	**14,72**
500	**26,18**	**13,09**
700	**16,83**	**11,78**
900	**11,90**	**10,71**
1100	**8,93**	**9,82**

q_z [kN/m] as permanent load over L.

Point Load

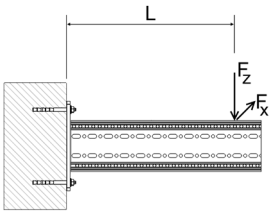

L_{max}	$F_{z, perm}$ for $F_x = 0$	$F_{z, perm}$ for $F_x = \mu_0 * F_z$
[mm]	[kN]	[kN]
300	**12,40**	**12,40**
500	**10,25**	**10,25**
700	**8,73**	**8,73**
900	**7,07**	**7,07**
1100	**5,78**	**5,78**

F_z [kN] as a permanent load at distance L; F_x [kN] as a variable load at distance L.

2 Point Loads

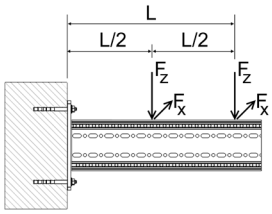

L_{max}	$F_{z, perm}$ for $F_x = 0$	$F_{z, perm}$ for $F_x = \mu_0 * F_z$
[mm]	[kN]	[kN]
300	**6,73**	**6,73**
500	**5,75**	**5,75**
700	**5,01**	**5,01**
900	**4,45**	**4,45**
1100	**3,86**	**3,86**

F_z [kN] as permanent loads at distance L and L/2; F_x [kN] as variable loads at distance L and L/2.

3 Point Loads

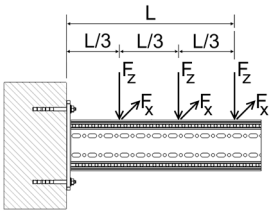

L_{max}	$F_{z, perm}$ for $F_x = 0$	$F_{z, perm}$ for $F_x = \mu_0 * F_z$
[mm]	[kN/m]	[kN]
300	**4,62**	**4,62**
500	**3,99**	**3,99**
700	**3,52**	**3,52**
900	**3,14**	**3,14**
1100	**2,84**	**2,84**

F_z [kN] as permanent loads at distance L, 2*L/3 and L/3; F_x [kN] as variable loads at distance L, 2*L/3 and L/3.

Friction coefficient μ_0 = 0,2 for friction in longitudinal direction; Max. deviation L/100.

Working loads in accordance with Eurocode 3

L-Construction F 100/160 - 100

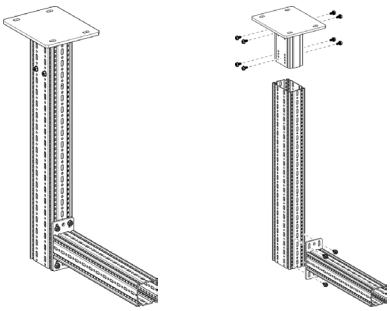

Part List
1 x End Support WBD F 100/160
1 x Beam Section TP F 100/160
1 x Cantilever Bracket AK F 100
12 x Self-Forming-Screw FLS F

Distributed Load

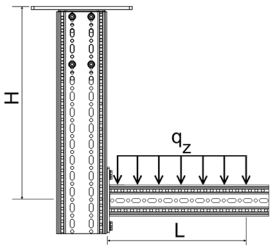

H_{max} \ L_{max}	300		500		700		900		1100	
	$q_{z, perm}$	F_z (q_z * L)	$q_{z, perm}$	F_z (q_z * L)	$q_{z, perm}$	F_z (q_z * L)	$q_{z, perm}$	F_z (q_z * L)	$q_{z, perm}$	F_z (q_z * L)
[mm]	[kN/m]	[kN]	[kN/m]	[kN]	[kN/m]	[kN]	[kN/m]	[kN]	[kN/m]	[kN]
2000	**22,46**	**6,74**	**9,69**	**4,84**	**5,26**	**3,68**	**3,25**	**2,92**	**2,18**	**2,39**
2500	**20,64**	**6,19**	**8,95**	**4,48**	**4,87**	**3,41**	**3,02**	**2,71**	**2,02**	**2,23**
3000	**19,10**	**5,73**	**8,32**	**4,16**	**4,54**	**3,18**	**2,81**	**2,53**	**1,89**	**2,08**
3500	**17,76**	**5,33**	**7,77**	**3,88**	**4,25**	**2,98**	**2,64**	**2,37**	**1,77**	**1,95**

q_z [kN/m] as permanent load over L.

Point Load

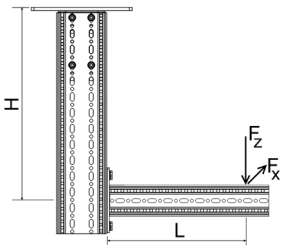

H_{max} \ L_{max}	300		500		700		900		1100	
	$F_{z, perm}$ for		$F_{z, perm}$ for		$F_{z, perm}$ for		$F_{z, perm}$ for		$F_{z, perm}$ for	
	$F_x = 0$	$F_x = \mu_0 * F_z$	$F_x = 0$	$F_x = \mu_0 * F_z$	$F_x = 0$	$F_x = \mu_0 * F_z$	$F_x = 0$	$F_x = \mu_0 * F_z$	$F_x = 0$	$F_x = \mu_0 * F_z$
[mm]	[kN]	[kN]	[kN]	[kN]	[kN]	[kN]	[kN]	[kN]	[kN]	[kN]
2000	**4,00**	**3,39**	**2,65**	**2,49**	**1,94**	**1,94**	**1,50**	**1,50**	**1,21**	**1,21**
2500	**3,70**	**3,16**	**2,46**	**2,36**	**1,80**	**1,80**	**1,40**	**1,40**	**1,13**	**1,13**
3000	**3,44**	**2,88**	**2,30**	**2,25**	**1,69**	**1,69**	**1,31**	**1,31**	**1,06**	**1,06**
3500	**3,21**	**2,36**	**2,15**	**2,14**	**1,58**	**1,58**	**1,23**	**1,23**	**0,99**	**0,99**

F_z [kN] as a permanent load at distance L; F_x [kN] as a variable load at distance L.

2 Point Loads

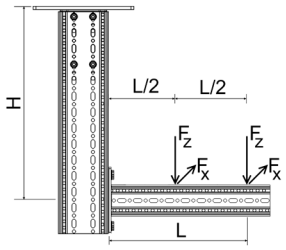

H_{max} \ L_{max}	300		500		700		900		1100	
	$F_{z, perm}$ for		$F_{z, perm}$ for		$F_{z, perm}$ for		$F_{z, perm}$ for		$F_{z, perm}$ for	
	$F_x = 0$	$F_x = \mu_0 * F_z$	$F_x = 0$	$F_x = \mu_0 * F_z$	$F_x = 0$	$F_x = \mu_0 * F_z$	$F_x = 0$	$F_x = \mu_0 * F_z$	$F_x = 0$	$F_x = \mu_0 * F_z$
[mm]	[kN]	[kN]	[kN]	[kN]	[kN]	[kN]	[kN]	[kN]	[kN]	[kN]
2000	**2,57**	**1,95**	**1,74**	**1,49**	**1,29**	**1,20**	**1,01**	**1,00**	**0,82**	**0,82**
2500	**2,37**	**1,80**	**1,61**	**1,40**	**1,20**	**1,14**	**0,94**	**0,94**	**0,76**	**0,76**
3000	**2,20**	**1,44**	**1,50**	**1,32**	**1,12**	**1,08**	**0,88**	**0,88**	**0,71**	**0,71**
3500	**2,05**	**1,18**	**1,40**	**1,18**	**1,05**	**1,03**	**0,82**	**0,82**	**0,67**	**0,67**

F_z [kN] as permanent loads at distance L and L/2; F_x [kN] as variable loads at distance L and L/2.

3 Point Loads

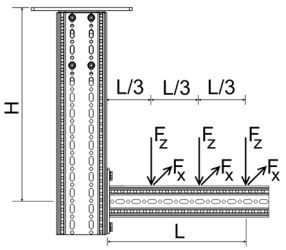

H_{max} \ L_{max}	300		500		700		900		1100	
	$F_{z, perm}$ for		$F_{z, perm}$ for		$F_{z, perm}$ for		$F_{z, perm}$ for		$F_{z, perm}$ for	
	$F_x = 0$	$F_x = \mu_0 * F_z$	$F_x = 0$	$F_x = \mu_0 * F_z$	$F_x = 0$	$F_x = \mu_0 * F_z$	$F_x = 0$	$F_x = \mu_0 * F_z$	$F_x = 0$	$F_x = \mu_0 * F_z$
[mm]	[kN]	[kN]	[kN]	[kN]	[kN]	[kN]	[kN]	[kN]	[kN]	[kN]
2000	**1,87**	**1,37**	**1,28**	**1,06**	**0,95**	**0,86**	**0,74**	**0,72**	**0,60**	**0,60**
2500	**1,72**	**1,20**	**1,18**	**0,99**	**0,88**	**0,81**	**0,69**	**0,69**	**0,56**	**0,56**
3000	**1,60**	**0,96**	**1,10**	**0,93**	**0,82**	**0,77**	**0,65**	**0,65**	**0,53**	**0,53**
3500	**1,49**	**0,79**	**1,03**	**0,79**	**0,77**	**0,73**	**0,61**	**0,61**	**0,49**	**0,49**

F_z [kN] as permanent loads at distance L, 2*L/3 and L/2; F_x [kN] as variable loads at distance L, 2*L/3 and L/2.

All illustrated structures are able to be installed standing as well.
Friction coefficient $\mu_0 = 0{,}2$ for friction in longitudinal direction; Max. deviation H/100; L/100.

Working loads in accordance with Eurocode 3

Frame F 100/160 - 100

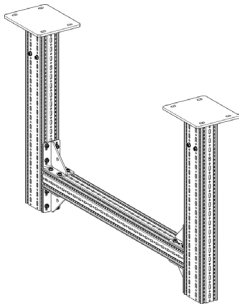

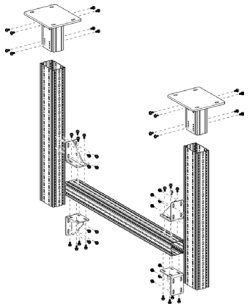

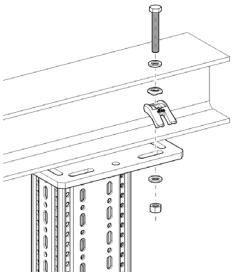

Part List
2 x End Support WBD F 100/160
2 x Beam Section TP F 100/160
1 x Beam Section TP F 100
4 x Corner Bracket WD F 100
48 x Self-Forming-Screw FLS F

Distributed Load

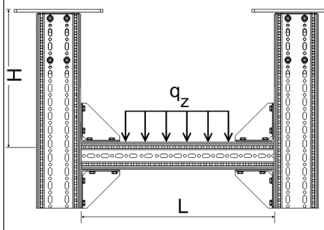

H_{max} \ L_{max}	1500		2000		2500		3000		3500		4000	
	$q_{z, perm}$	F_z (q_z * L)	$q_{z, perm}$	F_z (q_z * L)	$q_{z, perm}$	F_z (q_z * L)	$q_{z, perm}$	F_z (q_z * L)	$q_{z, perm}$	F_z (q_z * L)	$q_{z, perm}$	F_z (q_z * L)
[mm]	[kN/m]	[kN]	[kN/m]	[kN]	[kN/m]	[kN]	[kN/m]	[kN]	[kN/m]	[kN]	[kN/m]	[kN]
1500	**22,07**	**26,92**	**16,39**	**28,20**	**12,90**	**28,63**	**9,64**	**26,22**	**6,61**	**21,28**	**4,67**	**17,37**
2000	**22,07**	**26,92**	**16,39**	**28,20**	**12,90**	**28,63**	**9,60**	**26,12**	**6,48**	**20,87**	**4,58**	**17,04**
2500	**22,07**	**26,92**	**16,39**	**28,20**	**12,90**	**28,63**	**9,41**	**25,60**	**6,35**	**20,46**	**4,49**	**16,72**
3000	**21,95**	**26,78**	**16,27**	**27,98**	**12,89**	**28,62**	**9,23**	**25,11**	**6,24**	**20,08**	**4,41**	**16,42**
3500	**21,87**	**26,68**	**16,22**	**27,90**	**12,81**	**28,43**	**9,06**	**24,65**	**6,12**	**19,72**	**4,34**	**16,13**

q_z [kN/m] as permanent load over L.

Point Load

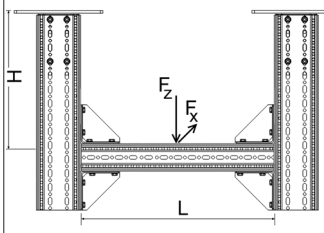

H_{max} \ L_{max}	1500		2000		2500		3000		3500		4000	
	$F_{z, perm}$ for		$F_{z, perm}$ for		$F_{z, perm}$ for		$F_{z, perm}$ for		$F_{z, perm}$ for		$F_{z, perm}$ for	
	$F_x = 0$	$F_x = \mu_0 * F_z$	$F_x = 0$	$F_x = \mu_0 * F_z$	$F_x = 0$	$F_x = \mu_0 * F_z$	$F_x = 0$	$F_x = \mu_0 * F_z$	$F_x = 0$	$F_x = \mu_0 * F_z$	$F_x = 0$	$F_x = \mu_0 * F_z$
[mm]	[kN]	[kN]	[kN]	[kN]	[kN]	[kN]	[kN]	[kN]	[kN]	[kN]	[kN]	[kN]
1500	**29,43**	**9,89**	**23,20**	**9,82**	**19,25**	**9,75**	**16,51**	**9,68**	**13,39**	**8,88**	**10,73**	**7,91**
2000	**29,20**	**7,57**	**23,03**	**7,51**	**19,12**	**7,45**	**16,41**	**7,39**	**13,15**	**7,29**	**10,55**	**6,76**
2500	**28,96**	**6,13**	**22,85**	**6,09**	**18,98**	**6,04**	**16,29**	**5,99**	**12,91**	**5,94**	**10,37**	**5,68**
3000	**28,72**	**5,16**	**22,67**	**5,12**	**18,83**	**5,09**	**16,17**	**5,04**	**12,69**	**4,95**	**10,19**	**4,77**
3500	**28,49**	**4,40**	**22,49**	**4,37**	**18,69**	**4,32**	**16,00**	**4,25**	**12,48**	**4,16**	**10,03**	**4,05**

F_z [kN] as a permanent load at distance L/2; F_x [kN] as a variable load at distance L/2.

2 Point Loads

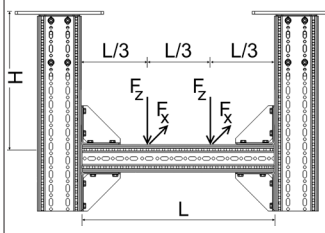

H_{max} \ L_{max}	1500		2000		2500		3000		3500		4000	
	$F_{z, perm}$ for		$F_{z, perm}$ for		$F_{z, perm}$ for		$F_{z, perm}$ for		$F_{z, perm}$ for		$F_{z, perm}$ for	
	$F_x = 0$	$F_x = \mu_0 * F_z$	$F_x = 0$	$F_x = \mu_0 * F_z$	$F_x = 0$	$F_x = \mu_0 * F_z$	$F_x = 0$	$F_x = \mu_0 * F_z$	$F_x = 0$	$F_x = \mu_0 * F_z$	$F_x = 0$	$F_x = \mu_0 * F_z$
[mm]	[kN]	[kN]	[kN]	[kN]	[kN]	[kN]	[kN]	[kN]	[kN]	[kN]	[kN]	[kN]
1500	**16,45**	**4,95**	**16,24**	**4,92**	**13,53**	**4,89**	**10,17**	**4,86**	**7,95**	**4,57**	**6,39**	**4,11**
2000	**16,45**	**3,79**	**16,24**	**3,76**	**13,25**	**3,74**	**9,98**	**3,72**	**7,80**	**3,69**	**6,27**	**3,46**
2500	**16,45**	**3,07**	**16,24**	**3,05**	**12,99**	**3,03**	**9,79**	**3,01**	**7,65**	**2,99**	**6,16**	**2,88**
3000	**16,38**	**2,58**	**16,09**	**2,57**	**12,74**	**2,55**	**9,61**	**2,53**	**7,52**	**2,49**	**6,05**	**2,41**
3500	**16,31**	**2,20**	**16,02**	**2,18**	**12,51**	**2,16**	**9,44**	**2,13**	**7,39**	**2,09**	**5,95**	**2,04**

F_z [kN] as permanent loads at distance 2*L/3 and L/3; F_x [kN] as variable loads at distance 2*L/3 and L/3.

3 Point Loads

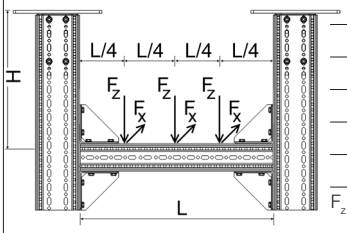

H_{max} \ L_{max}	1500		2000		2500		3000		3500		4000	
	$F_{z, perm}$ for		$F_{z, perm}$ for		$F_{z, perm}$ for		$F_{z, perm}$ for		$F_{z, perm}$ for		$F_{z, perm}$ for	
	$F_x = 0$	$F_x = \mu_0 * F_z$	$F_x = 0$	$F_x = \mu_0 * F_z$	$F_x = 0$	$F_x = \mu_0 * F_z$	$F_x = 0$	$F_x = \mu_0 * F_z$	$F_x = 0$	$F_x = \mu_0 * F_z$	$F_x = 0$	$F_x = \mu_0 * F_z$
[mm]	[kN]	[kN]	[kN]	[kN]	[kN]	[kN]	[kN]	[kN]	[kN]	[kN]	[kN]	[kN]
1500	**10,99**	**3,30**	**10,86**	**3,28**	**9,80**	**3,26**	**7,58**	**3,25**	**5,93**	**3,08**	**4,77**	**2,79**
2000	**10,99**	**2,53**	**10,86**	**2,51**	**9,80**	**2,49**	**7,43**	**2,48**	**5,82**	**2,46**	**4,69**	**2,33**
2500	**10,99**	**2,05**	**10,85**	**2,03**	**9,64**	**2,02**	**7,29**	**2,01**	**5,71**	**1,99**	**4,60**	**1,93**
3000	**10,92**	**1,72**	**10,76**	**1,71**	**9,45**	**1,70**	**7,15**	**1,69**	**5,61**	**1,67**	**4,52**	**1,62**
3500	**10,87**	**1,47**	**10,71**	**1,46**	**9,28**	**1,44**	**7,02**	**1,42**	**5,51**	**1,40**	**4,44**	**1,36**

F_z [kN] as permanent loads at distance 3*L/4, L/2 and L/4; F_x [kN] as variable loads at distance 3*L/4, L/4 and L/4.

For assembly with STA F 100 - 100/160 F_z has to be reduced by the reduction ratio F_a.

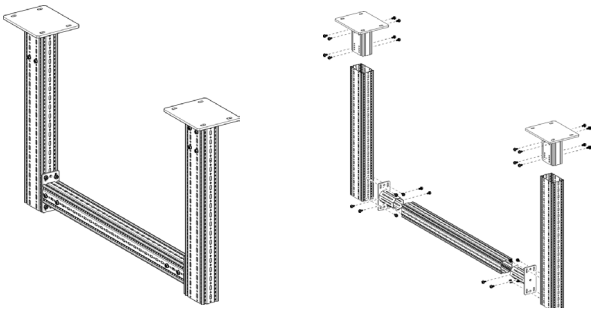

Part List
2 x End Support WBD F 100/160
2 x Beam Section TP F 100/160
1 x Beam Section TP F 100
2 x End Support STA F 100
32 x Self-Forming-Screw FLS F

	Reduction ratio F_a [%]	
	$F_{z, perm}$ for	
L (mm)	$F_x = 0$	$F_x = 0,2 * F_z$
1500	**-15%**	**0%**
2000	**-25%**	**0%**
2500	**-30%**	**0%**
3000	**-30%**	**0%**
3500	**-35%**	**-5%**

All illustrated structures are able to be installed standing as well.
Friction coefficient $\mu_0 = 0,2$ for friction in longitudinal direction; Max. deviation H/100; Max. bending L/200.

Working loads in accordance with Eurocode 3

Beam Section 100

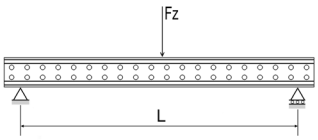

L_{max}	$F_{z, perm}$
[mm]	[kN]
1000	**50,0**
1600	**31,0**
2000	**24,5**
3000	**15,0**
4000	**10,5**
5000	**7,8**
6000	**5,9**

F_z [kN] as a permanent load at L/2; Max. bending L/150.

Part List
Sikla-Beam Section H100

L-Construction 100

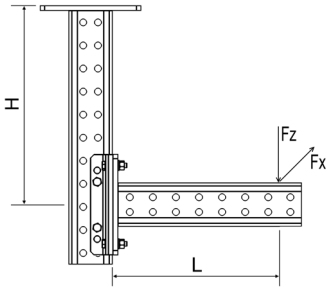

H_{max} \ L_{max}	200		600		1000	
	$F_{z, perm}$ for		$F_{z, perm}$ for		$F_{z, perm}$ for	
	$F_x = 0$	$F_x = \mu_0 * F_z$	$F_x = 0$	$F_x = \mu_0 * F_z$	$F_x = 0$	$F_x = \mu_0 * F_z$
[mm]	[kN]	[kN]	[kN]	[kN]	[kN]	[kN]
500	**4,35**	**1,73**	**1,56**	**0,64**	**0,93**	**0,38**
1000	**4,35**	**0,75**	**1,56**	**0,31**	**0,90**	**0,18**
1500	**4,35**	**0,40**	**1,36**	**0,18**	**0,80**	**0,11**

F_z [kN] as a permanent load, F_x [kN] as a variable load, max. deviation H/150; L/150;
Friction coefficient μ_0 = 0,2 (for friction in longitudinal direction).

Part List
2 x Beam Bracket TKO 100
1 x Bracket Plates FV 100/120

Frame 100

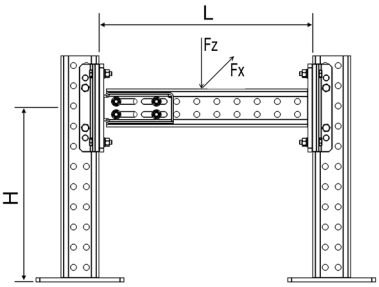

H_{max} \ L_{max}	500		1000		2000	
	$F_{z, perm}$ for		$F_{z, perm}$ for		$F_{z, perm}$ for	
	$F_x = 0$	$F_x = \mu_0 * F_z$	$F_x = 0$	$F_x = \mu_0 * F_z$	$F_x = 0$	$F_x = \mu_0 * F_z$
[mm]	[kN]	[kN]	[kN]	[kN]	[kN]	[kN]
500	**16,5**	**15,1**	**16,4**	**15,0**	**16,3**	**9,9**
1000	**16,5**	**15,1**	**16,4**	**15,0**	**16,3**	**9,9**
1500	**16,5**	**15,1**	**16,4**	**15,0**	**16,3**	**9,9**

F_z [kN] as a permanent load, F_x [kN] as a variable load;
Max. bending L/150, max. deviation H/150;
Friction coefficient μ_0 = 0,2 (for friction in longitudinal direction).

Part List
3 x Beam Bracket TKO 100
1 x End Support STA 100
1 x Bracket Plates FV 100/120

T-Support 100

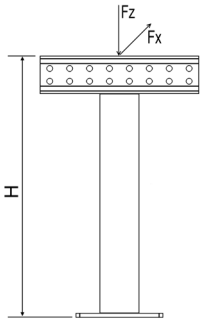

H_{max}	$F_{z, perm}$ for	
	$F_x = 0$	$F_x = \mu_0 * F_z$
[mm]	[kN]	[kN]
200	**13,0**	**13,0**
600	**13,0**	**13,0**
1000	**13,0**	**13,0**
1400	**13,0**	**13,0**
2000	**13,0**	**9,5**

F_z [kN] as a permanent load; F_x [kN] as a variable load, max. deviation H/150;
central load introduction for planned eccentricity ± 50 mm;
Friction coefficient μ_0 = 0,2 (for friction in longitudinal direction).

Part List
1 x Beam Bracket TKO
1 x T-Adapter TA 100

Working loads in accordance with Eurocode 3

Beam Section 100

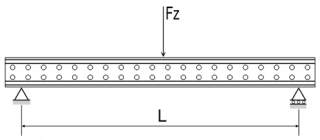

Part List
Sikla-Beam Section H100

L_{max}	$F_{z, perm}$
[mm]	[kN]
1000	**50,0**
1600	**31,0**
2000	**24,5**
3000	**15,0**
4000	**10,5**
5000	**7,8**
6000	**5,9**

F_z [kN] as a permanent load at L/2, Max. bending L/150.

L-Construction 100

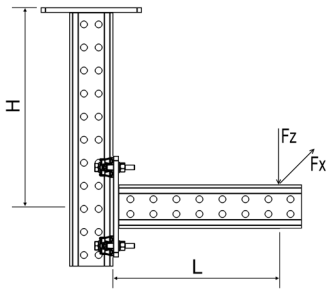

Part List
2 x Beam Bracket TKO 100
1 x Assembly Set MS 5P M12 S

L_{max} / H_{max}	200 $F_{z, perm}$ for		600 $F_{z, perm}$ for		1000 $F_{z, perm}$ for	
	$F_x = 0$	$F_x = \mu_0 * F_z$	$F_x = 0$	$F_x = \mu_0 * F_z$	$F_x = 0$	$F_x = \mu_0 * F_z$
[mm]	[kN]	[kN]	[kN]	[kN]	[kN]	[kN]
500	**3,51**	**3,22**	**2,67**	**1,54**	**2,13**	**0,95**
1000	**3,51**	**0,96**	**2,67**	**0,43**	**2,13**	**0,27**
1500	**3,51**	**0,46**	**2,59**	**0,22**	**1,79**	**0,14**

F_z [kN] as a permanent load, F_x [kN] as a variable load; max. deviation H/150; L/150;
Friction coefficient μ_0 = 0,2 (for friction in longitudinal direction).

Frame 100

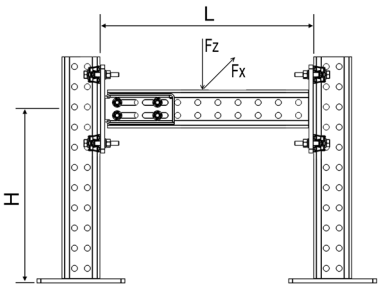

Part List
3 x Beam Bracket TKO 100
1 x End Support STA 100
2 x Assembly Set MS 5P M12 S

L_{max} / H_{max}	500 $F_{z, perm}$ for		1000 $F_{z, perm}$ for		2000 $F_{z, perm}$ for	
	$F_x = 0$	$F_x = \mu_0 * F_z$	$F_x = 0$	$F_x = \mu_0 * F_z$	$F_x = 0$	$F_x = \mu_0 * F_z$
[mm]	[kN]	[kN]	[kN]	[kN]	[kN]	[kN]
500	**8,2**	**8,0**	**8,1**	**7,9**	**8,0**	**7,8**
1000	**8,2**	**8,0**	**8,1**	**7,9**	**8,0**	**7,8**
1500	**8,2**	**8,0**	**8,1**	**7,9**	**8,0**	**7,8**

F_z [kN] as a permanent load, F_x [kN] as a variable load;
Max. bending L/150, max. deviation H/150;
Friction coefficient μ_0 = 0,2 (for friction in longitudinal direction).

T-Support 100

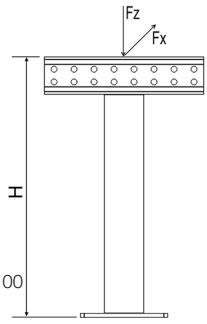

Part List
1 x Beam Bracket TKO 100
1 x T-Adapter TA 100

H_{max}	$F_{z, perm}$ for	
	$F_x = 0$	$F_x = \mu_0 * F_z$
[mm]	[kN]	[kN]
200	**13,0**	**13,0**
600	**13,0**	**13,0**
1000	**13,0**	**13,0**
1400	**13,0**	**13,0**
2000	**13,0**	**9,5**

F_z [kN] as a permanent load; F_x [kN] as a variable load, max. deviation H/150;
central load introduction for planned eccentricity ± 50 mm;
Friction coefficient μ_0 = 0,2 (for friction in longitudinal direction).

Working loads in accordance with Eurocode 3

Beam Bracket 100

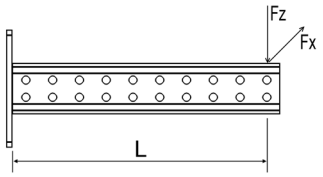

L_{max}	$F_{z, perm}$ for $F_x = 0$	$F_x = \mu_0 * F_z$
[mm]	[kN]	[kN]
Connection with Assembly Set MS 5P M12 S		
200	**3,51**	**3,22**
400	**3,03**	**2,62**
600	**2,67**	**2,21**
800	**2,37**	**1,90**
1000	**2,13**	**1,67**
1400	**1,76**	**1,33**
2000	**1,36**	**0,99**

F_z [kN] as a permanent load, F_x [kN] as a variable load; Max. bending L/150.

Part List
1 Beam Bracket TKO 120

Joining Beam Bracket 100

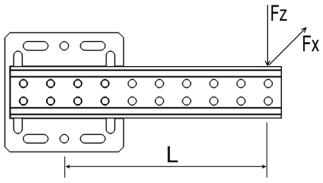

L_{max}	$F_{z, perm}$ for $F_x = 0$	$F_x = \mu_0 * F_z$
[mm]	[kN]	[kN]
Connection with Assembly Set MS 5P M12 S / M16 S		
300	**0,62**	**0,61**
500	**0,37**	**0,36**
700	**0,24**	**0,24**
Connection with Bracket Plates		
300	**1,48**	**1,48**
500	**0,93**	**0,93**
700	**0,66**	**0,66**

F_z [kN] as a permanent load, F_x [kN] as a variable load, max. deviation L/150;
Friction coefficient μ_0 = 0,2 (for friction in longitudinal direction).

Part List
1 x Joining Beam Bracket QKOq

Angled Beam Bracket 100

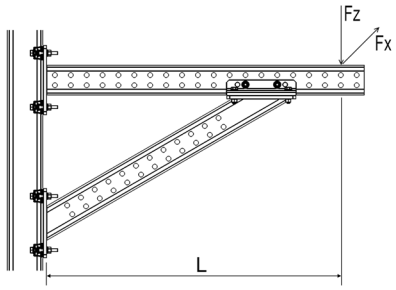

L_{max}	$F_{z, perm}$ for $F_x = 0$	$F_x = \mu_0 * F_z$
[mm]	[kN]	[kN]
Inclined to the horizontal Bracket with 30°		
1000	**2,70**	**2,70**
678	**4,00**	**4,00**

F_z [kN] as a permanent load, F_x [kN] as a variable load, Max. bending L/150;
Friction coefficient μ_0 = 0,2 (for friction in longitudinal direction).

Part List
1 x Beam Bracket TKO 100
1 x Angled Beam Bracket SKO 100
2 x Assembly Set MS 5P M12 S
1 x Bracket Plates FV 100/120

Working loads in accordance with Eurocode 3

Beam Section 120

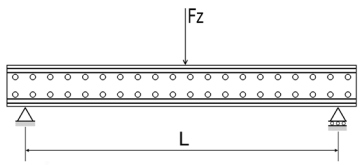

L_{max}	$F_{z, perm}$
[mm]	[kN]
1000	**98,5**
1600	**61,5**
2000	**49,5**
3000	**31,5**
4000	**22,3**
5000	**16,8**
6000	**13,0**

F_z [kN] as a permanent load at L/2; Max. bending L/150.

Part List
Sikla-Beam Section H120

L-Construction 120

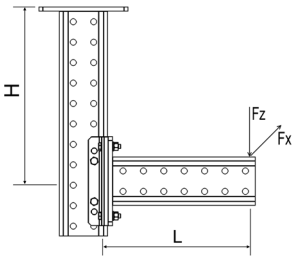

L_{max} / H_{max}	200 $F_{z, perm}$ for		600 $F_{z, perm}$ for		1000 $F_{z, perm}$ for	
	$F_x = 0$	$F_x = \mu_0 * F_z$	$F_x = 0$	$F_x = \mu_0 * F_z$	$F_x = 0$	$F_x = \mu_0 * F_z$
[mm]	[kN]	[kN]	[kN]	[kN]	[kN]	[kN]
500	**4,35**	**2,43**	**1,59**	**0,85**	**0,96**	**0,50**
1000	**4,35**	**1,45**	**1,59**	**0,57**	**0,96**	**0,34**
1500	**4,35**	**0,88**	**1,59**	**0,40**	**0,96**	**0,24**

F_z [kN] as a permanent load, F_x [kN] as a variable load, max. deviation H/150; L/150;
Friction coefficient μ_0 = 0,2 (for friction in longitudinal direction).

Part List
2 x Beam Bracket TKO 120
1 x Bracket Plates FV 100/120

Frame 120

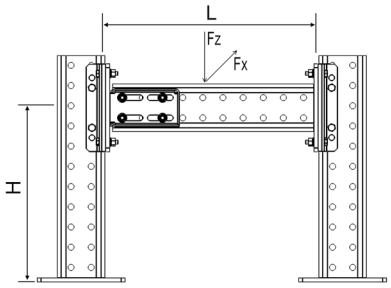

L_{max} / H_{max}	500 $F_{z, perm}$ for		1000 $F_{z, perm}$ for		2000 $F_{z, perm}$ for	
	$F_x = 0$	$F_x = \mu_0 * F_z$	$F_x = 0$	$F_x = \mu_0 * F_z$	$F_x = 0$	$F_x = \mu_0 * F_z$
[mm]	[kN]	[kN]	[kN]	[kN]	[kN]	[kN]
500	**16,5**	**15,1**	**16,3**	**14,9**	**16,1**	**14,7**
1000	**16,5**	**15,1**	**16,3**	**14,9**	**16,1**	**14,7**
1500	**16,5**	**15,1**	**16,3**	**14,9**	**16,1**	**14,7**

F_z [kN] as a permanent load, F_x [kN] as a variable load;
Max. bending L/150, max. deviation H/150;
Friction coefficient μ_0 = 0,2 (for friction in longitudinal direction).

Part List
3 x Beam Bracket TKO 120
1 x End Support STA 120
1 x Bracket Plates FV 100/120

T-Support 120

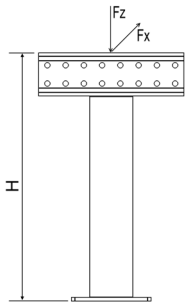

H_{max}	$F_{z, perm}$ for	
	$F_x = 0$	$F_x = \mu_0 * F_z$
[mm]	[kN]	[kN]
200	**23,6**	**23,6**
600	**23,6**	**23,6**
1000	**23,6**	**23,6**
1400	**23,6**	**21,6**
2000	**23,6**	**15,9**

F_z [kN] as a permanent load; F_x [kN] as a variable load, max. deviation H/150;
central load introduction for planned eccentricity ± 50 mm;
Friction coefficient μ_0 = 0,2 (for friction in longitudinal direction).

Part List
1 x Beam Bracket TKO 120
1 x T-Adapter TA 120

Working loads in accordance with Eurocode 3

Beam Section 120

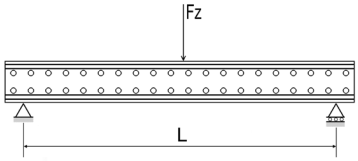

L_{max}	$F_{z, perm}$
[mm]	[kN]
1000	**98,5**
1600	**61,5**
2000	**49,5**
3000	**31,5**
4000	**22,3**
5000	**16,8**
6000	**13,0**

F_z [kN] as a permanent load at L/2; Max. bending L/150.

Part List
Sikla-Beam Section H120

L-Construction 120

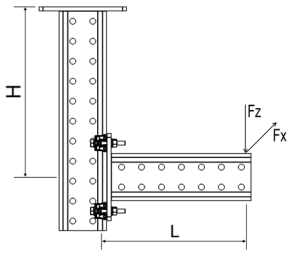

L_{max} / H_{max}	200 $F_{z, perm}$ for		600 $F_{z, perm}$ for		1000 $F_{z, perm}$ for	
	$F_x = 0$	$F_x = \mu_0 * F_z$	$F_x = 0$	$F_x = \mu_0 * F_z$	$F_x = 0$	$F_x = \mu_0 * F_z$
[mm]	[kN]	[kN]	[kN]	[kN]	[kN]	[kN]
500	**3,61**	**3,35**	**2,86**	**2,41**	**2,34**	**1,86**
1000	**3,61**	**2,59**	**2,86**	**1,23**	**2,34**	**0,78**
1500	**3,61**	**1,18**	**2,86**	**0,62**	**2,34**	**0,39**

F_z [kN] as a permanent load, F_x [kN] as a variable load, max. deviation H/150; L/150;
Friction coefficient μ_0 = 0,2 (for friction in longitudinal direction).

Part List
2 x Beam Bracket TKO 120
1 x Assembly Set MS 5P M12 S

Frame 120

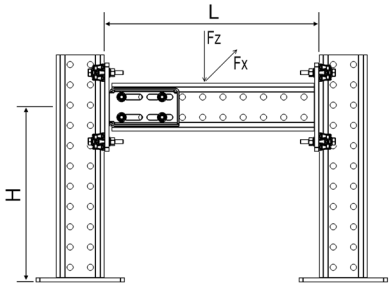

L_{max} / H_{max}	500 $F_{z, perm}$ for		1000 $F_{z, perm}$ for		2000 $F_{z, perm}$ for	
	$F_x = 0$	$F_x = \mu_0 * F_z$	$F_x = 0$	$F_x = \mu_0 * F_z$	$F_x = 0$	$F_x = \mu_0 * F_z$
[mm]	[kN]	[kN]	[kN]	[kN]	[kN]	[kN]
500	**8,2**	**8,0**	**8,0**	**7,8**	**7,8**	**7,6**
1000	**8,2**	**8,0**	**8,0**	**7,8**	**7,8**	**7,6**
1500	**8,2**	**8,0**	**8,0**	**7,8**	**7,8**	**7,6**

F_z [kN] as a permanent load, F_x [kN] as a variable load;
Max. bending L/150, max. deviation H/150;
Friction coefficient μ_0 = 0,2 (for friction in longitudinal direction).

Part List
3 x Beam Bracket TKO 120
1 x End Support STA 120
2 x Assembly Set MS 5P M12 S

T-Support 120

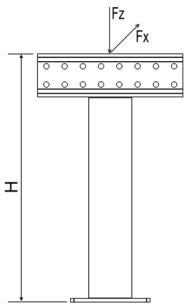

H_{max}	$F_{z, perm}$ for	
	$F_x = 0$	$F_x = \mu_0 * F_z$
[mm]	[kN]	[kN]
200	**23,6**	**23,6**
600	**23,6**	**23,6**
1000	**23,6**	**23,6**
1400	**23,6**	**21,6**
2000	**23,6**	**15,9**

F_z [kN] as a permanent load; F_x [kN] as a variable load, max. deviation H/150;
central load introduction for planned eccentricity ± 50 mm;
Friction coefficient μ_0 = 0,2 (for friction in longitudinal direction).

Part List
1 x Beam Bracket TKO 120
1 x T-Adapter TA 120

Working loads in accordance with Eurocode 3

Beam Bracket 120

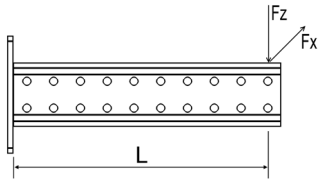

L_{max}	$F_{z, perm}$ for $F_x = 0$	$F_x = \mu_0 * F_z$
[mm]	[kN]	[kN]
Connection with Assembly Set MS 5P M12 S		
200	**3,61**	**3,35**
400	**3,20**	**2,81**
600	**2,86**	**2,41**
800	**2,57**	**2,10**
1000	**2,34**	**1,86**
1400	**1,95**	**1,49**
2000	**1,52**	**1,12**

F_z [kN] as a permanent load, F_x [kN] as a variable load, Max. bending L/150.

Part List
1 Beam Bracket TKO 120

Joining Beam Bracket 120

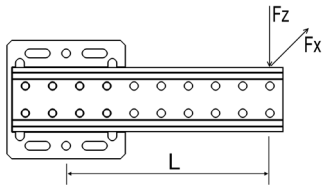

L_{max}	$F_{z, perm}$ for $F_x = 0$	$F_x = \mu_0 * F_z$
[mm]	[kN]	[kN]
Connection with Assembly Set MS 5P M12 S / M16 S		
300	**0,72**	**0,69**
500	**0,44**	**0,40**
700	**0,29**	**0,25**
Connection with Bracket Plates		
300	**1,46**	**1,46**
500	**0,90**	**0,90**
700	**0,62**	**0,62**

F_z [kN] as a permanent load, F_x [kN] as a variable load, max. deviation L/150;
Friction coefficient μ_0 = 0,2 (for friction in longitudinal direction).

Part List
1 x Joining Beam Bracket QKOq

Angled Beam Bracket 120

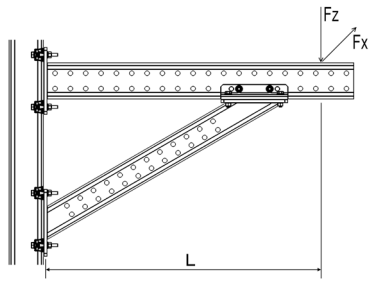

L_{max}	$F_{z, perm}$ for $F_x = 0$	$F_x = \mu_0 * F_z$
[mm]	[kN]	[kN]
Inclined to the horizontal Bracket with 30°		
1000	**2,70**	**2,70**
678	**4,00**	**4,00**

F_z [kN] as a permanent load, F_x [kN] as a variable load, Max. bending L/150;
Friction coefficient μ_0 = 0,2 (for friction in longitudinal direction).

Part List
1 x Beam Bracket TKO 120
1 x Angled Beam Bracket SKO 100
2 x Assembly Set MS 5P M12 S
1 x Bracket Plates FV 100/120

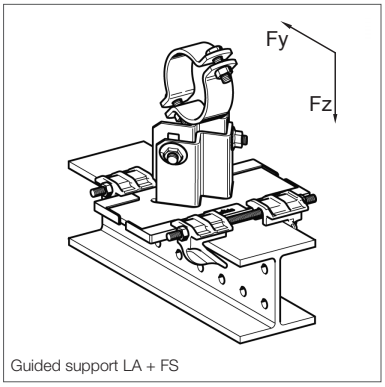

Guided support LA + FS

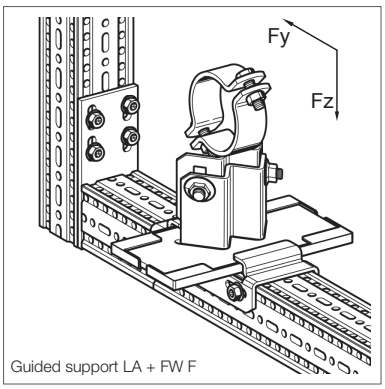

Guided support LA + FW F

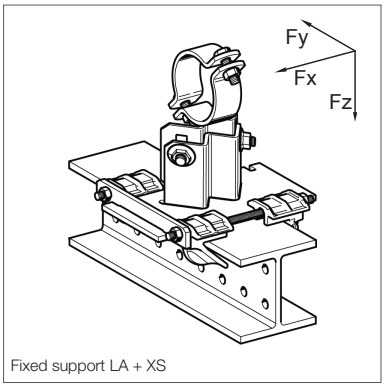

Fixed support LA + XS

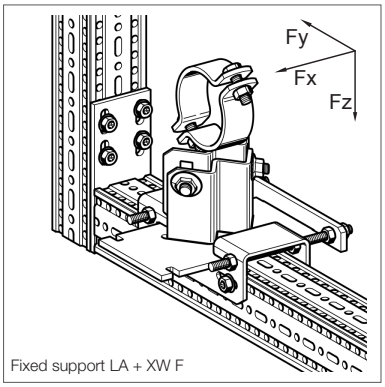

Fixed support LA + XW F

Working loads for Pipe Shoes LA, LC and LD - HV

Basis of assessment EC 3, working loads for Pipe Shoes as delivered

Pipe Shoe LA - HV + Guiding Set FS resp. Fixed Point Set XS
Pipe Shoe LA - HV + Guiding Bracket FW F resp. Fixed Point Bracket XW F

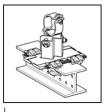
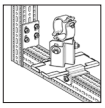
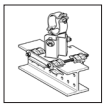
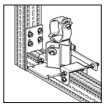

Height	DN	F_x [kN] only for fixed supports	F_y [kN]	+ F_z [kN]	- F_z FS 80/120 [kN]	- F_z FW F [kN]	- F_z XS 80/120 [kN]	- F_z XW F [kN]
90	≤ 25	9,1	5,2	15,4	14	6,1	15,4	15,4
90	32	8,8	4,9	15,4	14	6,1	15,4	15,4
90	40	8,6	4,8	15,4	14	6,1	15,4	15,4
90	50	8,2	4,4	15,4	14	6,1	15,4	15,4
90	65	7,7	3,9	15,4	14	6,1	15,4	15,4
90	80	7,3	3,6	15,4	14	6,1	15,4	15,4
90	100	6,5	2,8	15,4	14	6,1	15,4	15,4
90	125	5,7	2,1	15,4	14	6,1	15,4	15,4
90	150	4,7	1,3	15,4	14	6,1	15,4	15,4
150	≤ 25	8,0	4,2	15,4	14	6,1	15,4	15,4
150	32	7,9	3,9	15,4	14	6,1	15,4	15,4
150	40	7,8	3,9	15,4	14	6,1	15,4	15,4
150	50	7,6	3,6	15,4	14	6,1	15,4	15,4
150	65	7,4	3,2	15,4	14	6,1	15,4	15,4
150	80	7,2	3,0	15,4	14	6,1	15,4	15,4
150	100	6,9	2,5	15,4	14	6,1	15,4	15,4
150	125	6,5	2,0	15,4	14	6,1	15,4	15,4
150	150	6,1	1,4	15,4	14	6,1	15,4	15,4
200	≤ 25	6,3	3,6	15,4	14	6,1	15,4	15,4
200	32	6,2	3,5	15,4	14	6,1	15,4	15,4
200	40	6,2	3,4	15,4	14	6,1	15,4	15,4
200	50	6,0	3,2	15,4	14	6,1	15,4	15,4
200	65	5,9	3,0	15,4	14	6,1	15,4	15,4
200	80	5,7	2,8	15,4	14	6,1	15,4	15,4
200	100	5,5	2,4	15,4	14	6,1	15,4	15,4
200	125	5,2	2,0	15,4	14	6,1	15,4	15,4
200	150	4,9	1,6	15,4	14	6,1	15,4	15,4

Support (Rør support)

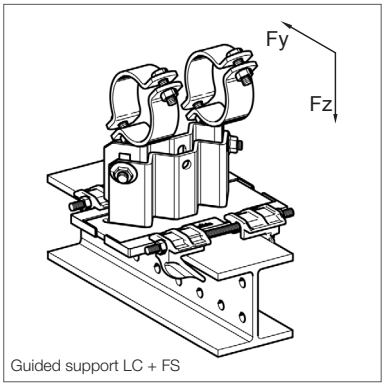

Guided support LC + FS

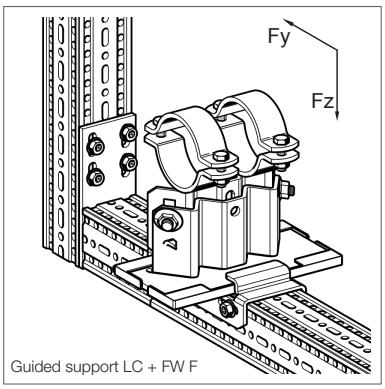

Guided support LC + FW F

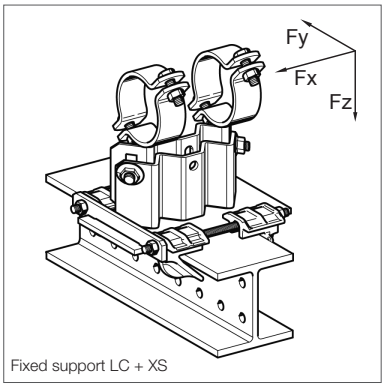

Fixed support LC + XS

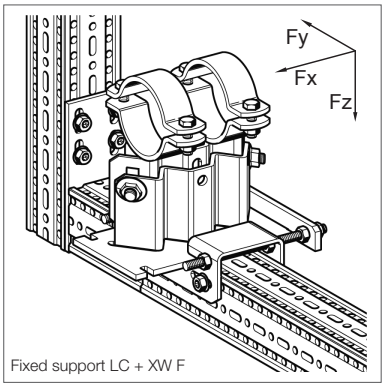

Fixed support LC + XW F

Pipe Shoe LC - HV + Guiding Set FS resp. Fixed Point Set XS
Pipe Shoe LC - HV + Guiding Bracket FW F resp. Fixed Point Bracket XW F

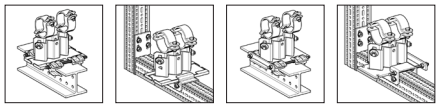

Height	DN	F_x [kN] only for fixed supports	F_y [kN]	$+F_z$ [kN]	$-F_z$ FS 80/120 [kN]	$-F_z$ FW F [kN]	$-F_z$ XS 80/120 [kN]	$-F_z$ XW F [kN]
90	≤ 25	14,3	6,3	17,0	14	6,1	17	17
90	32	14,1	6,2	17,0	14	6,1	17	17
90	40	14,0	6,1	17,0	14	6,1	17	17
90	50	13,9	5,9	17,0	14	6,1	17	17
90	65	13,6	5,6	17,0	14	6,1	17	17
90	80	13,5	5,4	17,0	14	6,1	17	17
90	100	13,1	5,0	17,0	14	6,1	17	17
90	125	12,7	4,5	17,0	14	6,1	17	17
90	150	12,3	4,0	17,0	14	6,1	17	17
90	200	11,6	3,2	17,0	14	6,1	17	17
90	250	10,8	2,3	17,0	14	6,1	17	17
90	300	10,1	1,5	17,0	14	6,1	17	17
150	≤ 25	8,5	4,9	17,0	14	6,1	17	17
150	32	8,5	4,8	17,0	14	6,1	17	17
150	40	8,5	4,7	17,0	14	6,1	17	17
150	50	8,4	4,6	17,0	14	6,1	17	17
150	65	8,4	4,4	17,0	14	6,1	17	17
150	80	8,4	4,3	17,0	14	6,1	17	17
150	100	8,3	4,0	17,0	14	6,1	17	17
150	125	8,3	3,7	17,0	14	6,1	17	17
150	150	8,2	3,3	17,0	14	6,1	17	17
150	200	8,1	2,7	17,0	14	6,1	17	17
150	250	8,0	2,1	17,0	14	6,1	17	17
150	300	7,9	1,5	17,0	14	6,1	17	17
200	≤ 25	7,3	5,3	17,0	14	6,1	17	17
200	32	7,2	5,2	17,0	14	6,1	17	17
200	40	7,2	5,1	17,0	14	6,1	17	17
200	50	7,1	4,9	17,0	14	6,1	17	17
200	65	7,0	4,7	17,0	14	6,1	17	17
200	80	6,9	4,6	17,0	14	6,1	17	17
200	100	6,7	4,3	17,0	14	6,1	17	17
200	125	6,5	4,0	17,0	14	6,1	17	17
200	150	6,3	3,6	17,0	14	6,1	17	17
200	200	5,9	3,0	17,0	14	6,1	17	17
200	250	5,5	2,3	17,0	14	6,1	17	17
200	300	5,1	1,7	17,0	14	6,1	17	17

TÜVRheinland LGA tested Quality

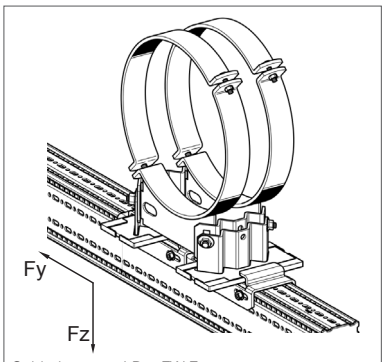

Guided support LD + FW F

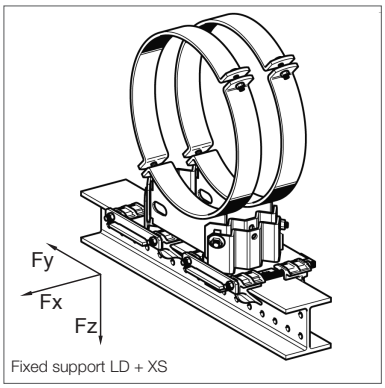

Fixed support LD + XS

Pipe Shoe LD - HV + 2 x Guiding Set FS resp. 2 x Fixed Point Set XS
Pipe Shoe LD - HV + 2 x Guiding Bracket FW F resp. 2 x Fixed Point Bracket XW F

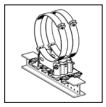
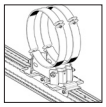
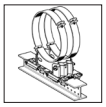


Height	DN	F_x [kN] only for fixed supports	F_y [kN]	$+F_z$ [kN]	$-F_z$ FS 80/120 [kN]	$-F_z$ FW F [kN]	$-F_z$ XS 80/120 [kN]	$-F_z$ XW F [kN]
90	≤ 350	25,0	13,1	32,8	28	12,2	32,8	32,8
90	400	22,5	11,9	32,8	28	12,2	32,8	32,8
90	500	20,8	9,4	32,8	28	12,2	32,8	32,8
90	600	10,3	7,2	32,8	28	12,2	32,8	32,8
150	≤ 350	25,0	12,9	32,8	28	12,2	32,8	32,8
150	400	22,5	11,5	32,8	28	12,2	32,8	32,8
150	500	17,3	8,8	32,8	28	12,2	32,8	32,8
150	600	8,7	6,3	32,8	28	12,2	32,8	32,8
200	≤ 350	25,0	11,3	32,8	28	12,2	32,8	32,8
200	400	20,5	10,2	32,8	28	12,2	32,8	32,8
200	500	15,7	8,1	32,8	28	12,2	32,8	32,8
200	600	7,5	6,1	32,8	28	12,2	32,8	32,8

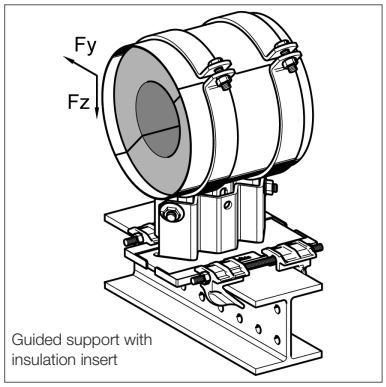

Guided support with insulation insert

Working loads for Supports with insulation insert and suspension

Basis of assessment EC 3, working loads for supports as delivered

Pipe Shoe LK - HV + Guiding Set FS

Height	DN	F_y [kN]	$+F_z$ [kN]
150	25	3,1	3,1
150	32	3,8	3,8
150	40	4,3	4,3
150	50	4,0	3,9
150	65	2,8	2,8
150	80	2,5	2,4
150	100	4,5	17,0
150	125	4,1	17,0
150	150	3,6	17,0
150	200	2,8	17,0
150	250	1,9	17,0
150	300	0,4	17,0

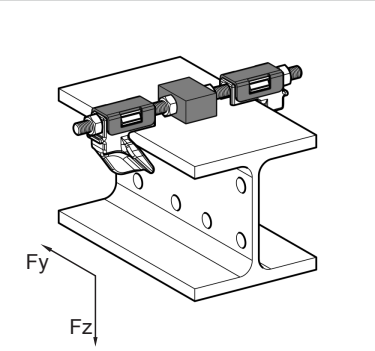

PA block type 30

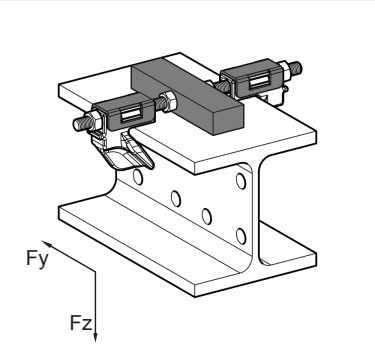

PA block type 100

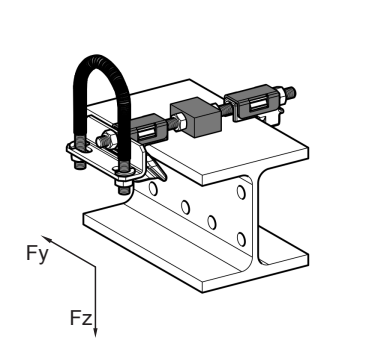

up to DN 50

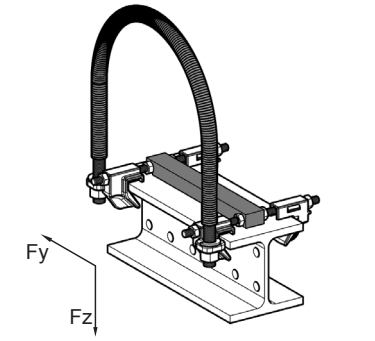

up to DN 65

Working loads for sliding supports LR - H 20, guided supports FR - H 20 and fixed points XR - H 20

Design according to EN 13480-3 Annex J

Sliding support LR - 20 with slide bar type 30 and type 100

DN	+ F_z [kN]
15	4,5
20	4,5
25	4,5
32	4,5
40	4,5
50	4,5
65	9,0
80	9,0
100	9,0
125	9,0
150	9,0
175	9,0
200	9,0
225	9,0
250	9,0
300	9,0

Guided support FR – H 20

DN	F_y [kN]	+ F_z [kN]	- F_z [kN]
15	0,2	4,5	0,2
20	0,2	4,5	0,2
25	0,2	4,5	0,2
32	0,2	4,5	0,2
40	0,2	4,5	0,2
50	0,2	4,5	0,2
65	0,9	9,0	1,1
80	0,9	9,0	1,1
100	0,9	9,0	1,1
125	0,9	9,0	1,1
150	0,9	9,0	1,1
175	0,9	9,0	1,1
200	0,9	9,0	1,1
225	0,9	9,0	1,1
250	0,9	9,0	1,1
300	0,9	9,0	1,1

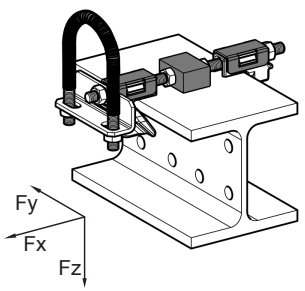

up to DN 50

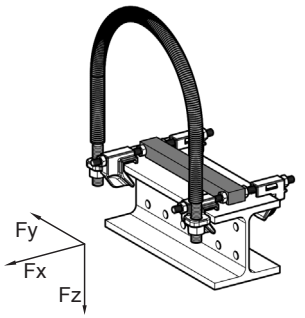

from DN 65 on

Fixed points XR - H 20

DN	F_x [kN]	F_y [kN]	$+F_z$ [kN]	$-F_z$ [kN]
15	0,5	0,2	4,5	0,2
20	0,5	0,2	4,5	0,2
25	0,5	0,2	4,5	0,2
32	0,5	0,2	4,5	0,2
40	0,5	0,2	4,5	0,2
50	0,5	0,2	4,5	0,2
65	0,3	0,9	9,0	1,1
80	0,3	0,9	9,0	1,1
100	0,3	0,9	9,0	1,1
125	0,3	0,9	9,0	1,1
150	0,3	0,9	9,0	1,1
175	0,3	0,9	9,0	1,1
200	0,3	0,9	9,0	1,1
225	0,3	0,9	9,0	1,1
250	0,3	0,9	9,0	1,1
300	0,3	0,9	9,0	1,1

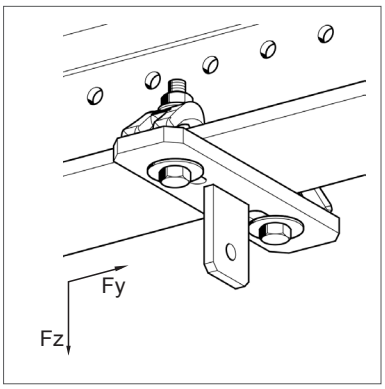

Working loads for Rod Hangers

Design according to EN 13480-3 Annex J
Working loads valid for up to 4 degrees Load Chain inclination.

Beam system Eye-Plate HP 80/99

Type	F_z [kN]
M10	11,2
M12	12,1
M16	12,5

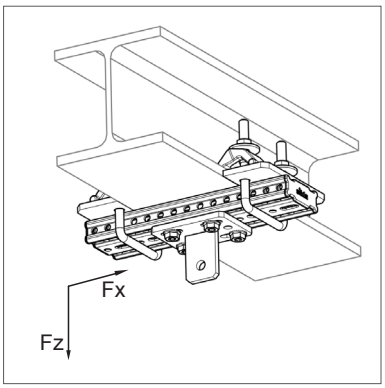

Rod hanger beam connection LKA

Trägerbreite 100-199 mm	
Type	F_z [kN]
M10	10,9
M12	11,5
M16	12,1

Trägerbreite 200-310 mm	
Type	F_z [kN]
M10	10,8
M12	11,3
M16	11,9

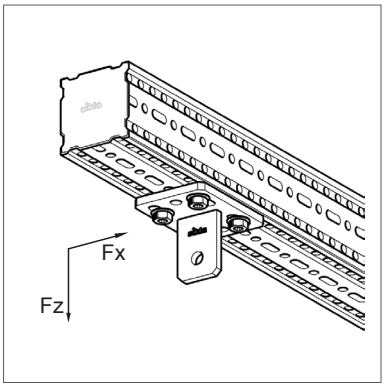

siFramo Eye-Plate HP F 80
siFramo Eye-Plate HP F 100

Type	F_z [kN]
M10	11,2
M12	12,1
M16	12,5

Fester for hengende support

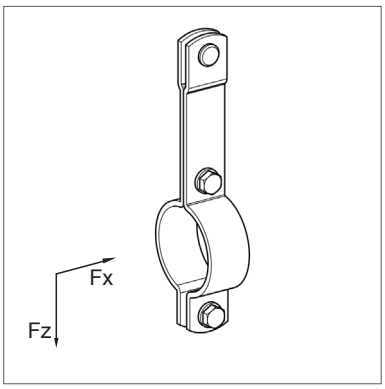

Pipe Clamp Stabil Form C LK

Beam width 100-199 mm	
DN	F_z [kN]
15	4,0
20	4,0
25	4,0
32	4,0
40	4,0
50	4,0
65	4,0
80	4,0
100	4,0
125	5,4
150	5,4
175	5,4
200	9,3
250	9,3
300	9,3

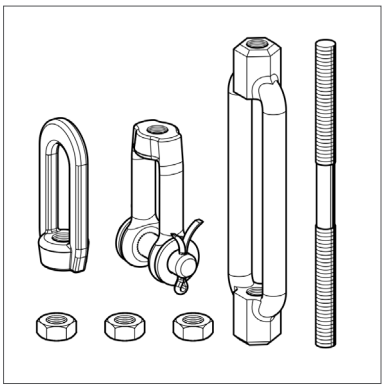

Rod Hanger Load Chain Assembly LKV

Type	F_z [kN]
M10	11,2
M12	12,1
M16	14,0

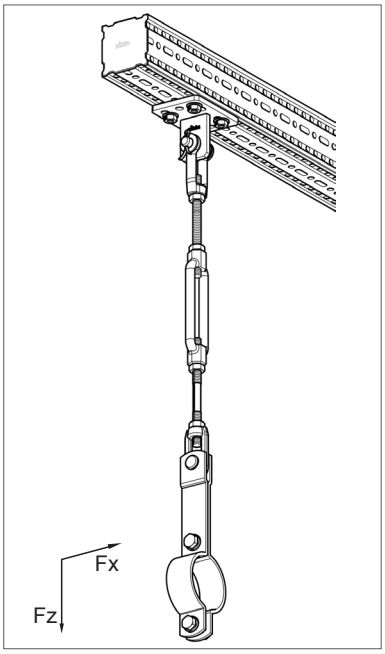

Supports (Pipe Shoes)

Application

The Sikla height- adjustable Supports (Pipe Shoes; HV 90, HV 150, HV 200) can be used as a Skid, a Guide or as a Fixed Point. The testing process of the individual Support types and the determination of the direction dependent permissible loads was carried out by the independent testing house TÜV Rheinland (Report No. 69617494/01).

Conformity

The Sikla Simotec Supports (Pipe Shoes) therefore fulfill DIN EN 13480-3 : 2012-11, where particularly in section 13.3.6.1 it is highlighted that the design of Pipe Support components is in accordance with DIN EN 1993.
For every Pipe Support type (incl. required connection kit) a declaration of conformity could be issued in accordance with ISO / IEC 17050.

Installation

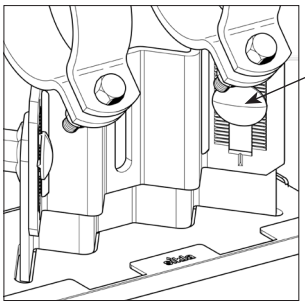

Special bolts for height- adjustable connection of lower and upper Pipe Shoe components.
Tightening torque: 80 Nm

By combining ***Pipe Shoe LA or LC*** with the steel supporting structure and connecting parts below, it is possible to create a guided pipe shoe or a fixed point pipe shoe:

Guiding Support on siFramo
+ Guiding Bracket FW F ...

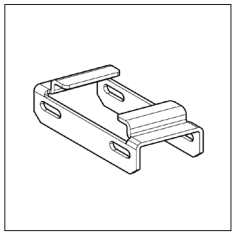

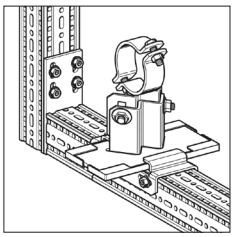

Fixed Point Support on siFramo
+ Fixed Point Bracket XW F ...

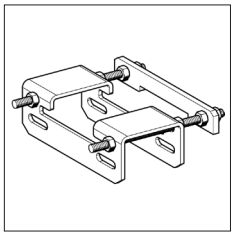

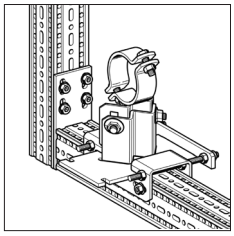

Guiding Support on steel beam section
+ Guiding Set FS ...

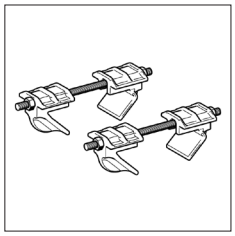

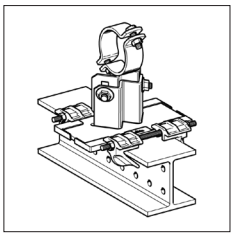

Fixed Point Support on steel beam section
+ Fixed Point Set XS ...

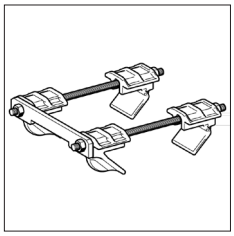

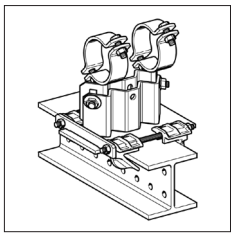

The dimension of the existing steel beam determines the required type of connection kit.
Can be installed on steel beams with flange width ≤ 300 mm and flange thickness ≤ 30 mm.

Design temperatures of pipe support components

The media temperature t_f has an influence on the system of the pipe support components. Acc. to DIN EN 13480-3 *„all components of the pipe support have to be designed based on a range of temperature from 0°C to 80°C. If the operational temperatures of the piping system are outside of this range, the corresponding values have to be specified.“*

During the design of pipe supports, components are basically assigned into 2 groups: inside and outside of insulation.

For all components beeing placed inside of an insulation the following values apply[2]:

Kind of component	Design temperature t of the pipe support (depending on the media temperature t_f)
Straps, pipe clamps and welded components with extensive contact to the piping system	$t = t_f$
Components not in contact with the piping system	$t = t_f$ - 20 °C
Bolts, nuts, etc.	$t = t_f$ - 30 °C

For all components beeing placed outside of the insulation the following values apply[3]:

Kind of component	Media temperature t_f	Design temperature t of the pipe support
Components in direct contact with the pipe	$t_f > 80$ °C	$t = \frac{1}{2} \times t_f$ (min. 80°C)
	$t_f \leq 80$ °C	t = 80 °C
Bolts, nuts, etc.	$t_f > 80$ °C	$t = \frac{1}{3} \times t_f$ (min. 80 °C)
	$t_f \leq 80$ °C	t = 80 °C

For clarification of the tables see the graphical illustration[4]:

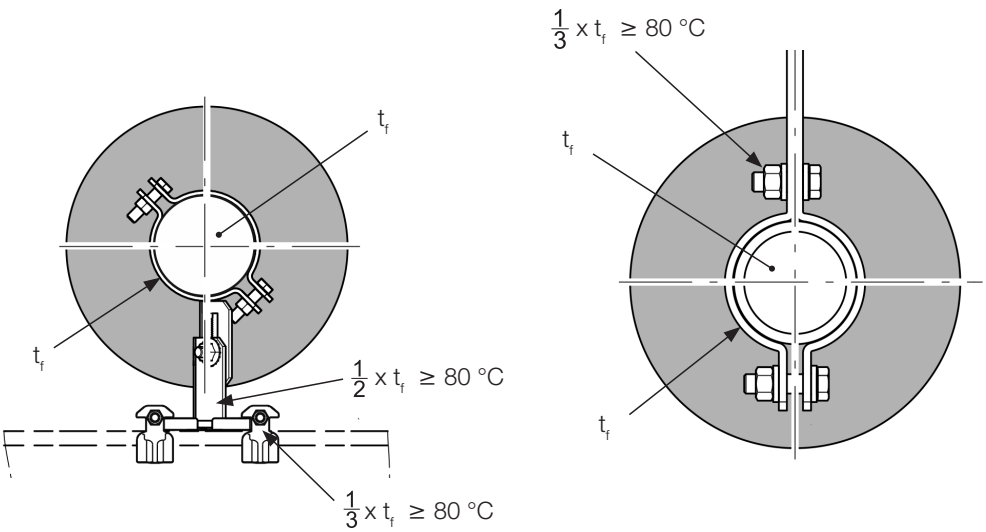

[1] Compare EN 13480-3:2014-12, Table 13.3.1
[2] Compare EN 13480-3:2014-12, Chapter 13.3.2.2-1
[3] Compare EN 13480-3:2014-12, Table 13.3.2-2
[4] Compare EN 13480-3:2014-12, Image 13.3.2-1

Correction values for pipe support components

The working loads of the SIKLA pipe shoes LA, LC and LD as well as for the rod hangers are valid for component temperatures up to 80°C. If components are getting warmer than 80°C in service, the stated working loads have to be added with the correction value k to reduce the working loads. Because SIKLA pipe support components are manufactured with steel grade S235JR (or higher), the appropriate correction value has to be applied.

Correction val k for S235JR depending on the temperature:

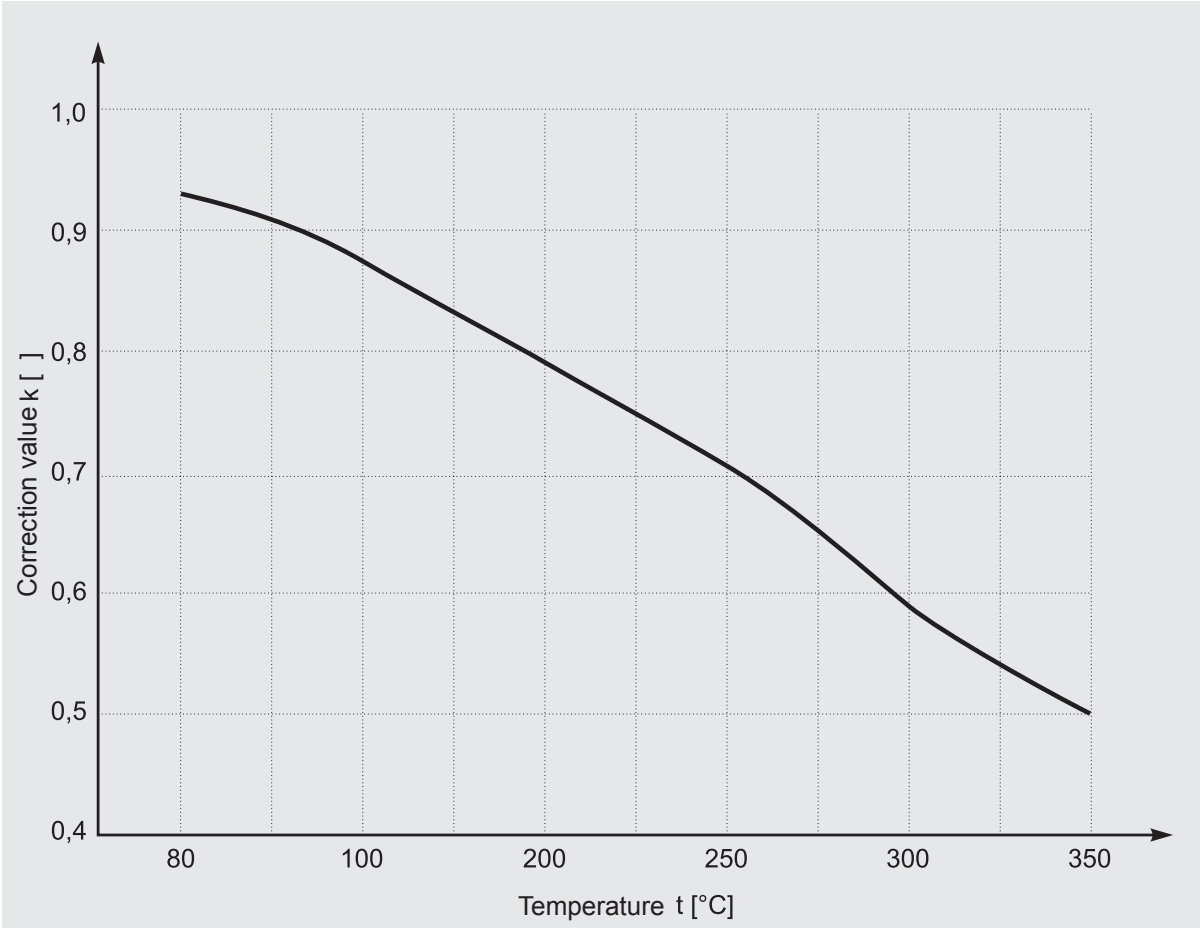

Correction values and practical application

$F_{perm} \geq F_{exist}$

$(F_{perm} = F_{R,20°C} * k) \geq F_{exist}$

Temperature t [°C}	Correction value k [ ]
80	0.93
100	0.88
200	0.79
250	0.71
300	0.58
350	0.50

F_{perm} permissible load of Sikla pipe shoe at temperature t_x [°C]

F_{exist} pipe load according to structural analysis

$F_{R,20°C}$ permissible load of Sikla pipe shoe at 20°C

k correction value

siFramo

Beam Section TP F 80 and TP F 100

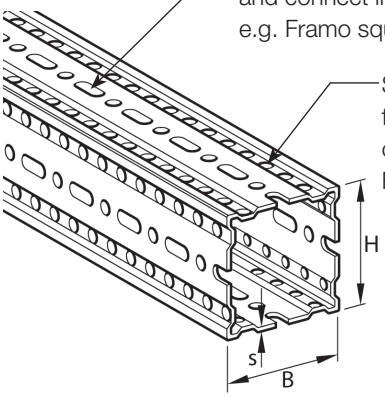

Self-Forming-Screws FLS F pass- through the slotted holes Ø11x30 mm and connect into the Framo components within the box section: e.g. Framo square End Support WBD F and Framo octagonal STA F.

Self-Forming-Screws FLS screws directly into the Ø 9.1 mm round-holes (perforations) running along the outer edges of each face of the Framo beam. All connecting Framo components are fixed in this way: e.g. Cantilever Brackets AK F, End Supports STA F, Channel Adapters SA F and Slide Sets GS F.

Self-Forming-Screw FLS F
Thread- forming bolt with locking- serration for all connections.

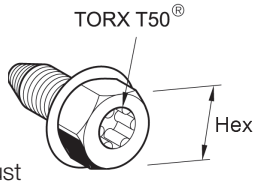

Attention!
▶ *Max. applied torque no more than 60 Nm !*

Assembly of Beam Section TP F with WBD-End Support and End Support STA F
For best performance the Self-Forming-Screw FLS F must be applied to both sides in greatest possible distance apart 2 x 2 screws opposite one another.
Distance between end of section and end-plate: ≤ 10 mm.

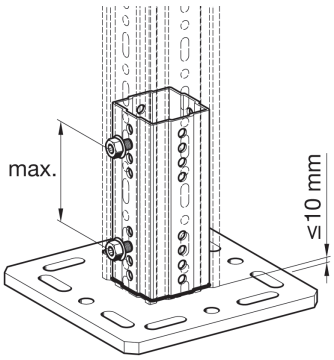

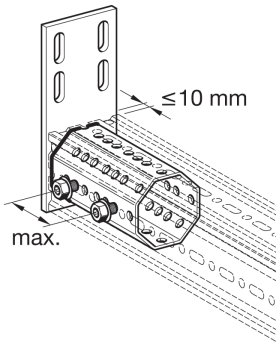

Assembly to Beam Section TP F, e.g. Cantilever Bracket AK F
Offset hole-lines allow for connection at one level without collision of bolts inside the box section for all components with end-plate (e.g. STA F, SA F).
4 Self-Forming-Screws are required to fix each end-plate!

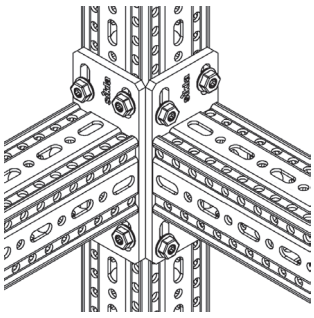

Each connection to the section requires 4 screws! Plugged through the slotted hole, these will screw into the round- hole of the section underneath.

Technical Data

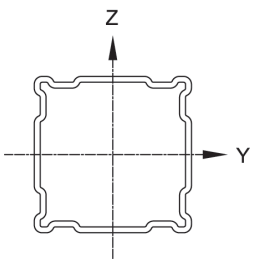

Description Beam Section [mm]	Description Axis	Wand-dicke s [mm]	Moment of Inertia I_y [cm⁴]	Moment of Inertia I_z [cm⁴]	Section Modulus W_y [cm³]	Section Modulus W_z [cm³]	Radius of Inertia i_y [cm]	Radius of Inertia i_z [cm]	Torsional Moment It [cm⁴]	Cross Section A [cm²]	Weight G [kg/m]
TP F 80/30	Y Z	3,0	35,4*)	6,7*)	10,3*)	4,7*)	3,63	1,58	8,58	2,69*)	4,3
TP F 80/80	Z Y	3,0	62,5*)		15,8*)		3,58		48,40*)	4,85	6,4
TP F 100/100		4,0	179,8*)		36,9*)		4,80		135,00	7,80*)	10,8
TP F 100/160	Z Y	4,0	559,4*)	280,3*)	75,5*)	46,2*)	6,16	4,36	193,00	14,74*)	14,3

Beam Section TP F. Steel. Hot-dipped-galvanized according to DIN EN ISO 1461 tZn o.
All structural data takes perforation into account.
*) determination of effective values by tests.

Section data Simotec Beam System 100 / 120

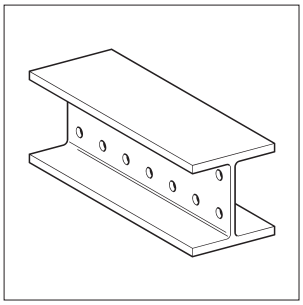

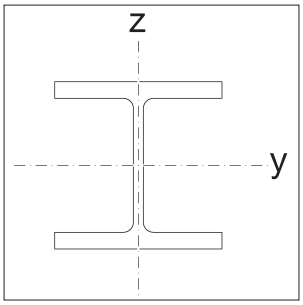

Type	Moment of Inertia [cm⁴]		Section Modulus [cm³]		Radius of Inertia [cm]		Torsional Moment [cm⁴]	Cross Section [cm²]	Weight [kg/m]
	I_y	I_z	W_y	W_z	i_y	i_z	It	A	G
H 100	**341**	**133**	**71,0**	**26,7**	**4,14**	**2,59**	**5,15**	**19,9**	**16,40**
HEA 100	349	134	72,8	26,8	4,06	2,51	5,26	21,2	16,70
H 120	**853**	**317**	**142,0**	**52,8**	**5,13**	**3,13**	**13,66**	**32,3**	**26,50**
HEB 120	864	318	144,0	52,9	5,04	3,06	13,90	34,0	26,70

Remarks
HEA 100 = IPBl 100 as per DIN 1025 Part 3: 1994-03: B100; H 96; Flange 8; Web 5 (EN 53)
HEB 120 = IPB 120 as per DIN 1025 Part 2: 1995-11: B120; H120; Flange11; Web 6,5 (EN 53)

Sikla Beam Sections H 100 und H 120 are hot-dipped-galvanized as per DIN 50976 / DIN EN ISO 1461.

Tightening torque for typical connections

Bracket Plates FV 100/120

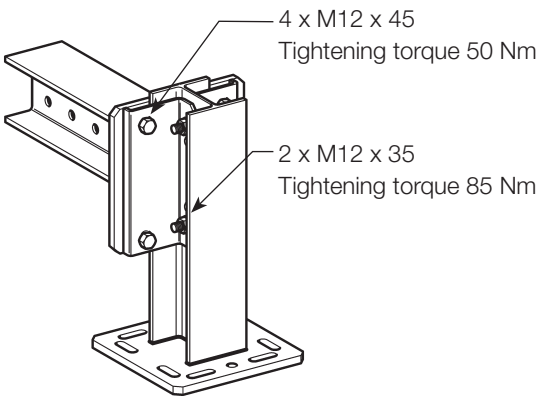

Assembly Set MS 5P M12 S

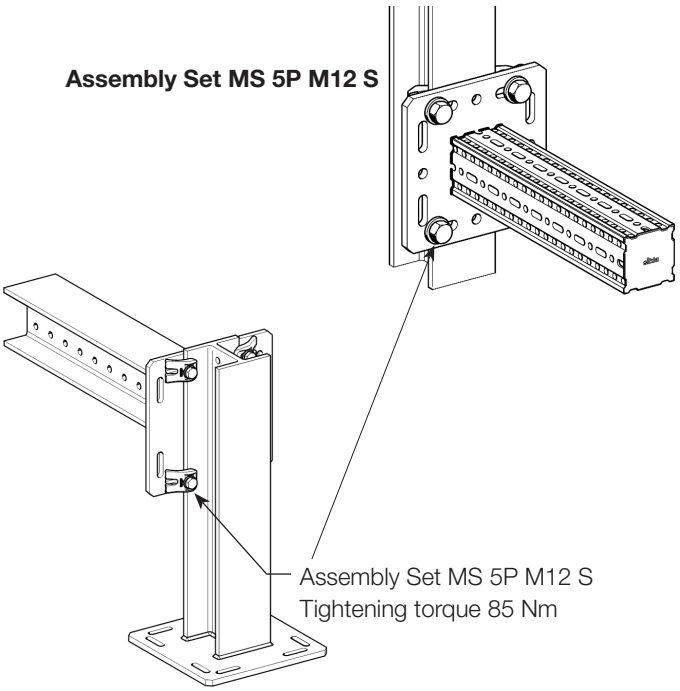

Connection to primary steel structure by Assembly Set P2 S and P3 S

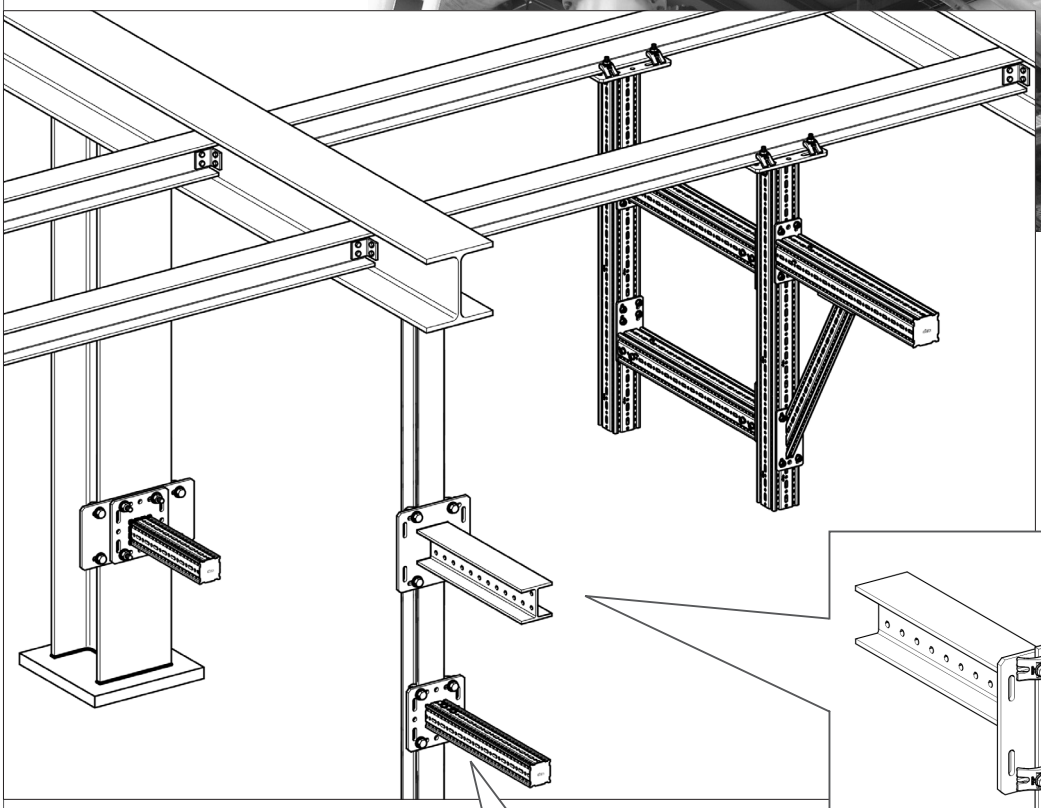

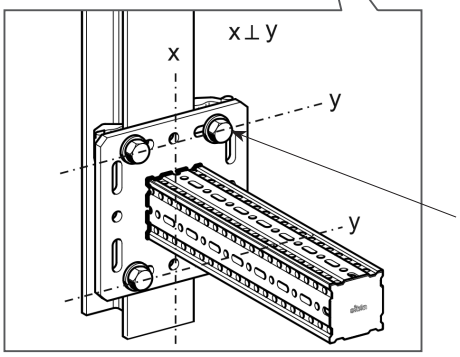

Description	Thread	Tightening torque [Nm]
Assembly Set MS 5P M12 S	M12	85
Assembly Set MS 5P M16 S	M16	150

Use Assembly Set always into slotted hole rows (y) in 90° direction to the main axis of the structural beam (x).

KRUGE
PIPING SYSTEMS

Postadresse: Postboks 78, 3431 Spikkestad
Besøksadresse: Industriveien 7, 3430 Spikkestad
Tlf: 32 24 29 00. E-post: post@kruge.no
www.kruge.no